DS-2CE17G0T-LFS
2K Smart Hybrid Light Audio Fixed Bullet Camera





- High quality imaging with 2K, 2304 × 1296 resolution
- Smart-Hybrid Light,optimize your security with flexible lighting options
- Up to 40 m IR distance for bright night imaging
- Up to 40 m white light distance for bright night imaging
- High quality audio with audio over coaxial cable, built-in mic
- One port for four switchable signals (TVI/AHD/CVI/CVBS)
- Water and dust resistant (IP67)

▪ Specification

Camera	
Image Sensor	2K CMOS
Max. Resolution	2304 (H) × 1296 (V)
Min. Illumination	0.01 Lux @ (F1.6, AGC ON), 0 Lux with IR
Shutter Time	PAL: 1/25 s to 1/50, 000 s; NTSC: 1/30 s to 1/50, 000 s
Day & Night	ICR
Angle Adjustment	Pan: 0 to 360°, Tilt: 0 to 180°, Rotation: 0 to 360°
Signal System	PAL/NTSC
Lens	
Lens Type	2.8 mm, 3.6 mm fixed focal lens
Focal Length & FOV	2.8 mm, horizontal FOV: 105°, vertical FOV: 60°, diagonal FOV: 129° 3.6 mm, horizontal FOV: 89°, vertical FOV: 47°, diagonal FOV: 107°
Lens Mount	M12
Microphone	
Pickup Distance	In a radius of up to 5 m
Amount	1
Illuminator	
Supplement Light Range	IR : Up to 40 m White Light : Up to 40 m
Supplement Light Type	Smart,IR,White Light
Image	
Image Settings	Brightness, Sharpness, Smart IR
Frame Rate	TVI: 2K @20fps, 1080P @25fps/30fps AHD: 1080P @25fps/30fps CVI: 1080P @25fps/30fps CVBS: PAL/NTSC
Day/Night Mode	Auto/Color
Wide Dynamic Range (WDR)	Digital WDR
Image Enhancement	DWDR/BLC/HLC/Global
White Balance	Auto/Manual
AGC	Yes
Interface	
Video Output	Switchable TVI/AHD/CVI/CVBS
General	
Power	12 VDC ± 25%, max. 5.3 W, *You are recommended to use one power adapter to supply the power for one camera.
Material	Front cover: Metal Main body: Plastic
Dimension	216.6 mm × 78.9 mm × 75.4 mm (8.53" × 3.10" × 2.97")
Weight	Approx. 340 g (0.75 lb.)
Operating Condition	-40 °C to 60 °C (-40 °F to 140 °F), Humidity: 90% or less (non-condensing)
Communication	HIKVISION-C
Language	English

Approval	
Protection	IP67

▪ Available Model

DS-2CE17G0T-LFS(2.8mm)

DS-2CE17G0T-LFS(3.6mm)

▪ Dimension

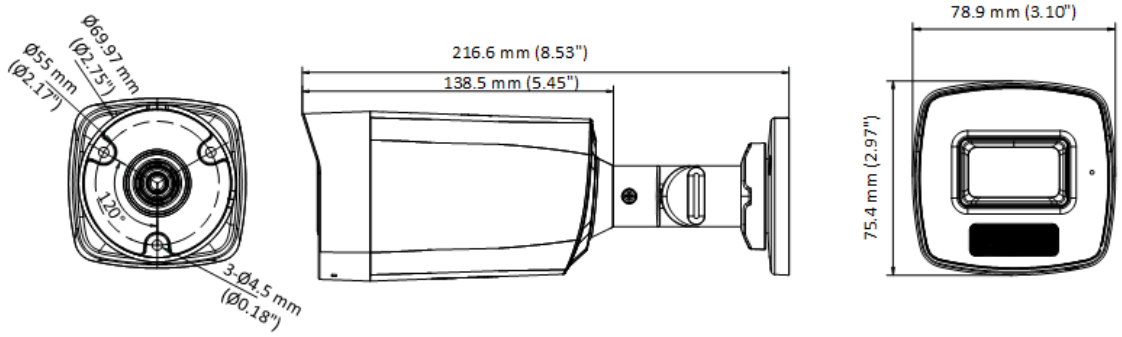

▪ Accessory

▪ Optional

DS-1280ZJ-XS


See Far, Go Further

www.hikvision.com
support@hikvision.com

© Hangzhou Hikvision Digital Technology Co., Ltd. Unless otherwise agreed, Hikvision makes no warranties, express or implied. We reserve the right to introduce modifications without notice.

HIKVISION®