DS-2CE17D0T-LXTS
2MP Two-Way Audio & Siren Fixed Bullet Camera





- High quality imaging with 2 MP, 1920 × 1080 resolution
- 2.8 mm, 3.6 mm fixed focal lens
- Up to 40 m IR distance for bright night imaging
- Up to 40 m white light distance for bright night imaging
- Smart-Hybrid Light, optimize your security with flexible lighting options
- Active strobe light and audio alarm
- High quality audio with audio over coaxial cable, built-in mic, and built-in speaker
- Provide real-time communication via built-in two-way audio
- Water and dust resistant (IP67)

▪ Specification

Camera	
Image Sensor	2 MP CMOS
Max. Resolution	1920 (H) × 1080 (V)
Min. Illumination	0.01 Lux @(F1.6, AGC ON), 0 Lux with White Light
Shutter Time	PAL: 1/12.5 s to 1/50,000 s,NTSC: 1/15 s to 1/50,000 s
Day & Night	ICR
Angle Adjustment	Pan: 0° to 360°,Tilt: 0° to 180°,Rotate: 0° to 360°
Signal System	PAL/NTSC
Lens	
Lens Type	2.8 mm, 3.6 mm fixed lens
Focal Length & FOV	2.8 mm, horizontal FOV: 105°, vertical FOV: 59°, diagonal FOV: 127°; 3.6 mm, horizontal FOV: 87°, vertical FOV: 46°, diagonal FOV: 105°
Lens Mount	M12
Microphone	
Pickup Distance	In a radius of up to 5 m
Amount	1
Speaker	
Rated Power	2 W
Speaker Range	In a radius of up to 5 m
Illuminator	
Supplement Light Type	IR, White Light
Supplement Light Range	IR: Up to 40 m,White Light: Up to 40 m
Image	
Image Settings	Anti-banding, Brightness, Sharpness, Smart IR
Frame Rate	TVI: 1080p @25 fps/30 fps
Day/Night Mode	Auto/Color/BW (Black and White)
Wide Dynamic Range (WDR)	Digital WDR
Image Enhancement	DWDR, BLC, HLC, Global, HLS
Noise Reduction	2D DNR
White Balance	Auto, Manual
Audio	
Audio Function	Echo Cancellation, AI Noise Reduction, Automatic Gain Control
Interface	
Video Output	1 HD analog output
Alarm	Flashing Light Alarm (Red & Blue)

General	
Power	12 VDC ± 25%, max.9.9 W
Material	Main body: Metal; Enclosure: Plastic
Dimension	211 mm × 83.5 mm × 80.7 mm (8.31" × 3.29" × 3.18")
Weight	Approx. 440 g (0.97 lb.)
Operating Condition	-40 °C to 60 °C (-40 °F to 140 °F). Humidity 90% or less (non-condensing)
Communication	HIKVISION-C
Language	English
Approval	
Protection	IP67

▪ Available Model

DS-2CE17D0T-LXTS(2.8mm)

DS-2CE17D0T-LXTS(3.6mm)

▪ Dimension

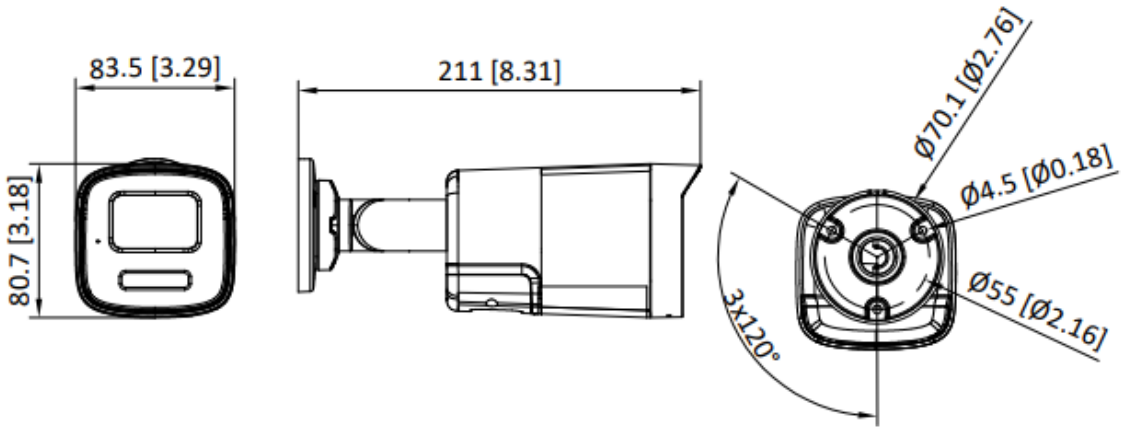

Unit:mm [inch]

SCALE	1:1

▪ Accessory

- **Optional**

DS-1275ZJ-SUS Vertical pole mount	DS-1276ZJ-SUS Corner mount	DS-1280ZJ-XS Junction box
		
	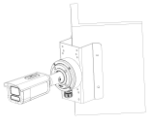	

Headquarters
No.555 Qianmo Road, Binjiang District,
Hangzhou 310051, China
T +86-571-8807-5998
www.hikvision.com

Follow us on social media to get the latest product and solution information.

Hikvision HikvisionHQ HikvisionHQ Hikvision_Global Hikvision Corporate Channel hikvisionhq

© Hangzhou Hikvision Digital Technology Co., Ltd. Unless otherwise agreed, Hikvision makes no warranties, express or implied. We reserve the right to introduce modifications without notice.