EN PG13B

Garden post

Thank you for purchasing our garden post for supplying electricity to outdoor areas, gardens and orchards. Please read this manual carefully and pay attention to the safety warnings and instructions before using the device. This will ensure not only the protection of persons, but also the long-term viability of the device.

TECHNICAL PARAMETERS

Sockets	2 sockets with children protection, max. 3600W / 220-240V~
LED LIGHT	G9 socket, max. 11W LED bulb. Not intended for classic light bulbs.
Protection class	IP44
Dimensions of the post	7 x 7 x 30 cm

POST INSTALLATION

Before installation, turn off the power supply to the power cable!

1. Unscrew the four screws on the bottom of the side surfaces and remove the base.
2. Place the base on a solid surface, mark and drill holes in the substrate through the holes in it and insert dowels into them.
3. Thread the power cable through the hole in the base and screw it into the surface.
4. Remove the cover with the terminal block from the column, open it and remove the cap.
5. Drill a hole on the bottom of the protective cover in the marked place, the drill diameter according to the cable to be connected.
6. Thread the power cable into the protective cover in a sufficient length to allow connection to the terminal block.
7. Connect the power cable to the terminal block and make sure that the connection is correct. The connection is marked on the terminal block and according to the color of the wires.
8. Put the lid back on, insert the entire cover with the cable and terminal block into the body of the post so that it does not touch the ground.
9. Place the post on the base and screw it on the sides.
10. Turn on the power supply.

BULB INSTALLATION AND REPLACEMENT

1. Unscrew the two screws on the side surfaces under the lighting cover.
2. Insert a G9 bulb (Max. 11W) and secure it.
3. Put the lighting cover back and screw it on.

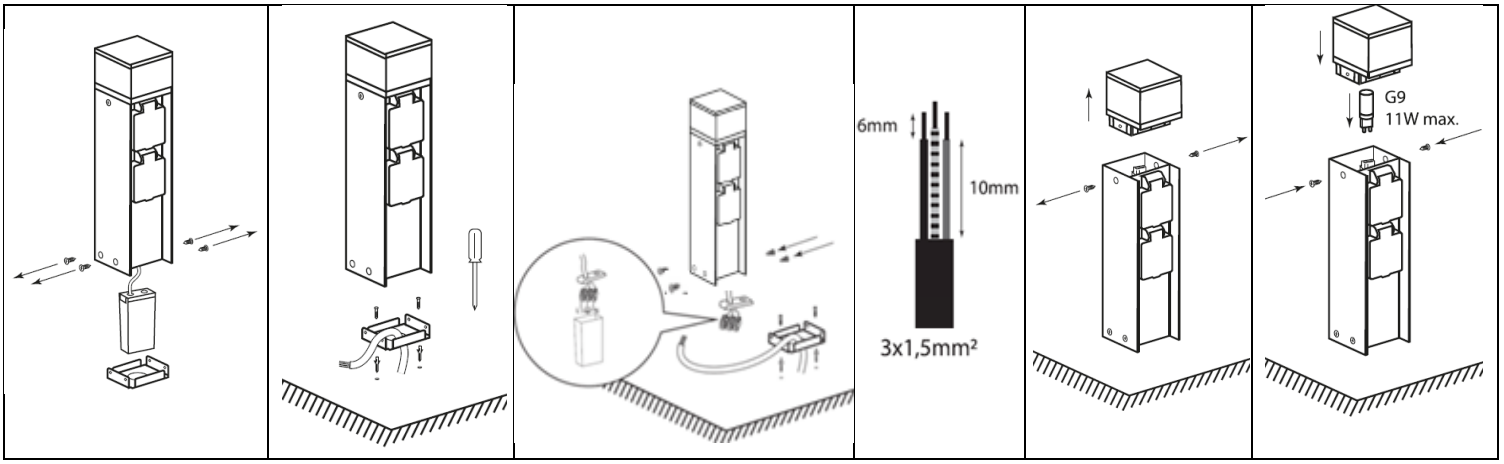

SAFETY NOTICE

- The product is intended for installation on solid surfaces only.
- Do not modify or repair the equipment.
- Do not interfere with the wiring, do not exceed the permitted load.
- Before cleaning, disconnect the product from the mains and unplug the power cord from its socket.
- Do not immerse the product in water! Protect from contact with fluxes and high temperature areas.
- Installation may only be carried out by a qualified person in accordance with the relevant regulations.

Solight Holding s.r.o. is in no way liable for damage to property or personal injury caused by improper installation or improper use.

Solight Holding, s.r.o., Na Brně 1972, Hradec Králové 500 06, Česká republika.