DS-2TD4668-25A4/W
Bi-spectrum PortableThermal PTZ Camera



Hikvision DS-2TD4668-25A4/W Bi-spectrum portable thermal PTZ camera supports temperature measurement, fire detection and perimeter protection. It is also equipped with a high-suction magnet at the base, which is easy to install. DS-2TD4668-25A4/W can be widely applied in temporary operation scenes like substation etc.

- 640 × 512 resolution, 12 µm, VOx UFPA, NETD < 35 mK (25°C, F1.0)
- High accuracy temperature exception alarm, -20°C to 150°C (-4°F to 302°F), ± 8°C (± 14.4°F)
- Image processing technology: linear, histogram, self-adaptive thermal AGC mode, DDE, 3D DNR
- Support GPS positioning function
- 2.4GHz Wi-Fi, easy for set-up.; LTE-TDD/LTE-FDD/WCDMA 4G wireless network transmission, support Micro SIM card
- One battery can support more than 10 hours of continuous working when the camera is only recording, and less than 6 hours of charging time when the camera is off
- Support mic and speaker
- Equipped with high suction magnets at the bottom, easy to install

▪ Specification

Thermal Module	
Image Sensor	VOx Uncooled Focal Plane Arrays
Resolution	640 x 512
Spectral Range	8 μm to 14 μm
Pixel Pitch	12 μm
Focal Length	25 mm
Focus Mode	Athermalized
IFOV	0.48 mrad
NETD	Less than 35 mK (@25 °C,F#=1.0)
Field of View	17.4° × 13.9° (H × V)
Aperture	F1.0
Digital Zoom	×1, ×2, ×4, ×8
Min. Focusing Distance	23 m
Optical Module	
Image Sensor	1/2.8" Progressive Scan CMOS
Resolution	2560 × 1440, 4 MP
Field of View	55°×33° (H × V)~2.4°×1.4° (H × V)
Focal Length	4.8 mm ~ 120 mm， 25X
Min. Illumination	Color: 0.05 Lux @ (F1.5, AGC ON), B/W: 0.01 Lux @ (F1.5, AGC ON)
Aperture (Range)	F1.0-F1.6
Focus Mode	Semi-auto & Manual
Digital Zoom	×1, ×2, ×4, ×8， ×16
Day & Night Mode	IR cut filter with auto switch
Shutter Speed	1/1 s to 1/30,000 s
WDR	120 dB
Optical Defog	Yes
Image Effect	
Picture in Picture	Display partial image of thermal channel on the full screen of optical channel
Target Coloration	Supported in white hot and black hot mode
PTZ	
Movement Range	Pan: 360° Continuous Rotate; Tilt: From -20° to + 90° (auto flip)
Pan Speed	Configurable, From 0.2°/s to 200°/s
Tilt Speed	Configurable, From 0.2°/s to 100°/s
Proportional Zoom	Yes
Presets	300 in total, 273 are configurable.
Patrol Scan	8; Up to 32 Presets Per Patrol
Pattern Scan	4; More Than 10 Minutes Per Pattern
Power Off Memory	Yes
Park	Preset/Pattern Scan/Patrol Scan/Auto Scan/Tilt Scan/Random Scan/Frame Scan/Panorama Scan
Illuminator	
IR Distance	Up to 100m
IR Intensity and Angle	Automatically adjusted

Smart Function	
VCA	4 VCA rule types (line crossing, intrusion, region entrance, and region exiting), up to 8 VCA rules in total.
Temperature Measurement	3 temperature measurement rule types, 273 presets as scene, 21 rules of each scene (10 points, 10 areas, and 1 line)
Temperature Range	-20 °C to 150 °C (-4 °F to 302 °F)
Temperature Accuracy	± 8 °C (±14.4 °F)
Fire Detection	Dynamic fire detection, up to 10 fire points detectable.
Video and Audio	
Main Stream	Optical channel 50 Hz: 25 fps (2560 × 1440，1920 × 1080, 1280 × 960, 1280 × 720) 60 Hz: 30 fps (2560 × 1440，1920 × 1080, 1280 × 960, 1280 × 720) Thermal channel 25 fps (1280 × 720, 704 x 576, 352 x 288, 384 x 288)
Sub-stream	Optical channel 50 Hz: 25fps (704 × 576, 352 × 288) 60 Hz: 30 fps (704 × 576, 352 × 288) Thermal channel 25 fps (704 × 576, 352 × 288, 384 × 288)
Video Compression	Main stream: H.265+/H.265/H.264+/ H.264 Sub-stream: H.265/H.264
Audio Compression	G .711u/G.711a/G.722.1/MP2L2/G.726/PCM/AAC
Video and Image	
Color Palettes	15 types (White hot, Black hot, Fusion 1, Rainbow, Fusion 2, Ironbow 1, Ironbow 2, Sepia, Color 1, Color 2, Ice fire, Rain, Red hot, Green hot, Dark blue)
Network	
Protocols	IPv4/IPv6, HTTP, HTTPS, 802.1x, Qos, FTP, SMTP, UPnP, SNMP, DNS, DDNS, NTP, RTSP, RTCP, RTP, TCP, UDP, IGMP, ICMP, DHCP, PPPoE
Network Storage	MicroSD/SDHC/SDXC card (up to 256 G) local storage, and NAS (NFS, SMB/CIFS), auto network replenishment (ANR)
API	ISAPI, HIKVISION SDK, third-party management platform, ONVIF (Profile S, Profile G, Profile T)
Simultaneous Live View	Up to 20 channels
User/Host level	Up to 32 users, 3 levels: Administrator, Operator, User
Security	User authentication (ID and password), MAC address binding, HTTPS encryption, IEEE 802.1x access control, IP address filtering
Client	iVMS-4200, Hik-Connect
Web Browser	Live view (plug-in allowed) : Internet Explorer 11 Live view (plug-in free) : Chrome 57.0 +, Firefox 52.0 + Local service : Chrome 57.0+, Firefox 52.0 +
Mobile Communication	
SIM Card Type	MicroSIM
Frequency	LTE FDD: B 1/3/5/7/8/20/28 LTE TDD: B 38/40/41 WCDMA: B 1/5/8
Standard	LTE FDD/LTE TDD/WCDMA

Wi-Fi	Wi-Fi standard: IEEE802.11b, 802.11g, 802.11n Frequency range: 2.4GHz~2.4835GHz Channel bandwidth: Support 20MHz Security: 64/128-bit WEP, WPA/WPA2, WPA-PSK/WPA2-PSK
Interface	
Alarm Action	Preset/Patrol Scan/Pattern Scan/SD Card Record/Relay Output/Smart capture/FTP upload/Email linkage
Audio Input	Built-In 2 Mics
Audio Output	Built-In Speaker
Communication Interface	1, RJ45 10 M/100 M Self-adaptive Ethernet interface. 1, RS-485 interface
General	
Menu Language	32 languages English, Russian, Estonian, Bulgarian, Hungarian, Greek, German, Italian, Czech, Slovak, French, Polish, Dutch, Portuguese, Spanish, Romanian, Danish, Swedish, Norwegian, Finnish, Croatian, Slovenian, Serbian, Turkish, Korean, Traditional Chinese, Thai, Vietnamese, Japanese, Latvian, Lithuanian, Portuguese (Brazil)
Power Supply	12VDC ± 20%, two-core terminal block
Power Consumption	2A, max. 20 W
Working Temperature/Humidity	From -20°C to 60°C (-68°F to 140°F); Humidity: 90% or Less
Protection Level	IP67 Standard; TVS 4000V Lightning Protection, Surge Protection and Voltage Transient Protection
Dimensions	Ø176mm×299mm
Weight	Approx. 4.5 kg (10.8 lb)
Mount	Magnetic suction mounting
Detection Range Table	
VCA Range for Humans	250 m
VCA Range for Vehicles	750 m
Battery	
Battery Type	Lithium battery
Battery Voltage	10.9V
Battery Capacity	10.5 Ah
Max. Charging Voltage	12.6 V

▪ Range Table

**The table is only for reference and the performance may vary according to different environment.*

VCA Range (Vehicles: 1.4 × 4.0 m)	VCA Range (Humans: 1.8 × 0.5 m)	Temperature Measurement (Object: 0.2 × 0.2 m)	Temperature Measurement (Object: 1 × 1 m)
750m	250m	83m	417m

▪ DORI

**The table is only for reference and the performance may vary according to different environment.*
**The optimal detection, recognition, and identification distances are calculated according to Johnson's Criteria.*

Detection Range: In order to distinguish an object from the background, the image must be covered by 1.5 or more pixels.
Recognition Range: In order to classify the object (animal, human, vehicle, etc.), the image must have at least 6 pixels across its critical dimension.
Identification Range: In order to identify the object and describe it in details, the critical dimension must have be least 12 pixels across



Detection Range (Vehicles: 1.4 × 4.0 m)	Detection Range (Humans: 1.8 × 0.5 m)	Recognition Range (Vehicles: 1.4 × 4.0 m)	Recognition Range (Humans: 1.8 × 0.5 m)	Identification Range (Vehicles: 1.4 × 4.0 m)	Identification Range (Humans: 1.8 × 0.5 m)
3194 m	1042m	799m	260 m	399m	130 m

▪ Available Model

DS-2TD4668-25A4/W

▪ Dimension

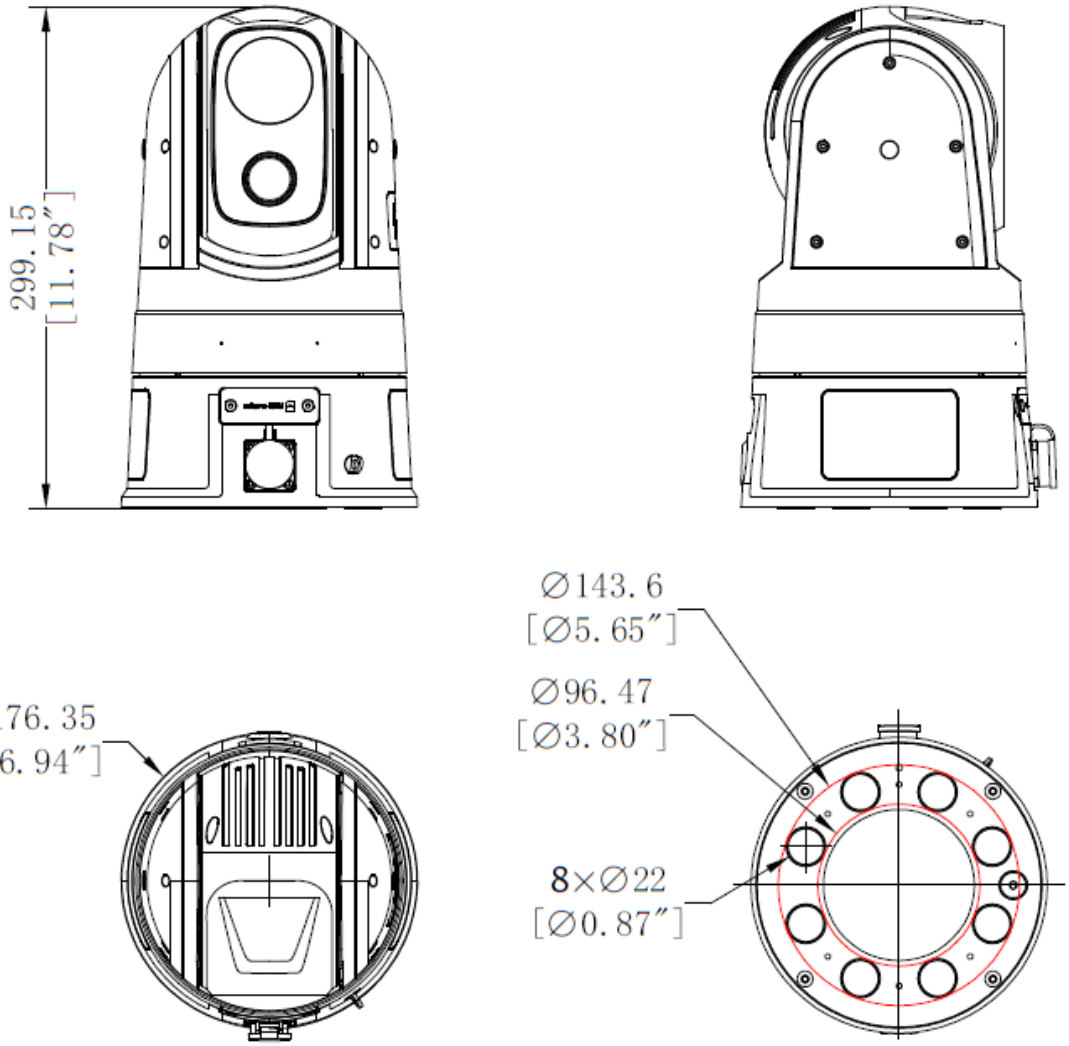
299.15
[11.78″]
∅143.6
[∅5.65″]
∅96.47
[∅3.80″]
∅176.35
[∅6.94″]
8×∅22
[∅0.87″]

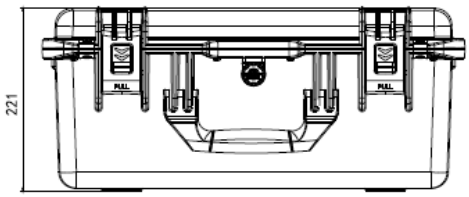
221

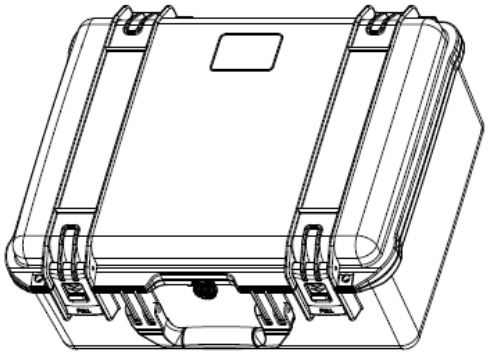

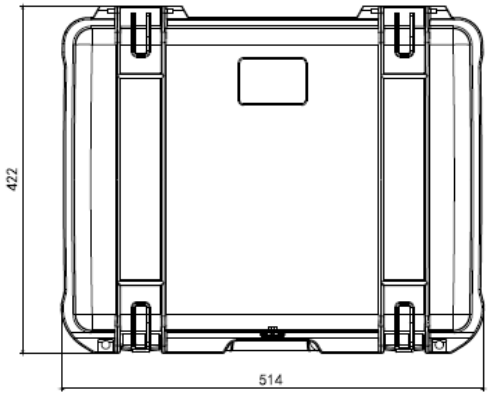
422
514

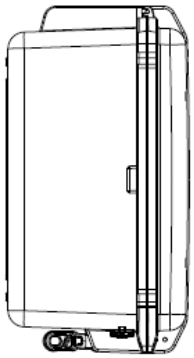

See Far, Go Further

www.hikvision.com
support@hikvision.com

© Hangzhou Hikvision Digital Technology Co., Ltd. Unless otherwise agreed, Hikvision makes no warranties, express or implied. We reserve the right to introduce modifications without notice.

HIKVISION®