# FireProtect 2 (Heat / Smoke) Jeweller



Wireless smoke and heat detector. Featured with a built-in siren for alarm and event notification. It can operate as part of the Ajax security system and autonomously without a hub.

Find the detailed information on the device at:

support.ajax.systems/en/manuals/fireprotect-2-heat-smoke/

The device is available in two options. The model with replaceable batteries has a mark **RB** in the name, and with non-replaceable batteries — the **SB**.

# Key features

Accurate detection of threats

1. **HazeFlow 2** software algorithm to prevent false alarms on the smoke.
2. Bispectral optical sensor for filtering false alarms on the smoke.
3. Maintenance-free smoke chamber.

Advanced hardware and software

1. An interconnected alarm of all fire detectors at the facility in 20 seconds.
2. Built-in siren with a volume of 85 dB at a distance of 3 meters.
3. Ability to operate autonomously without an Ajax hub.
4. Up to 10 years on non-replaceable batteries, and up to 7 years on replaceable.

Easy to install and configure

1. SmartBracket mounting panel with the ability to align the detector after installation.
2. Remote control and configuring via Ajax apps.
3. Pairing with the Ajax hub via QR code.

# Operating principle

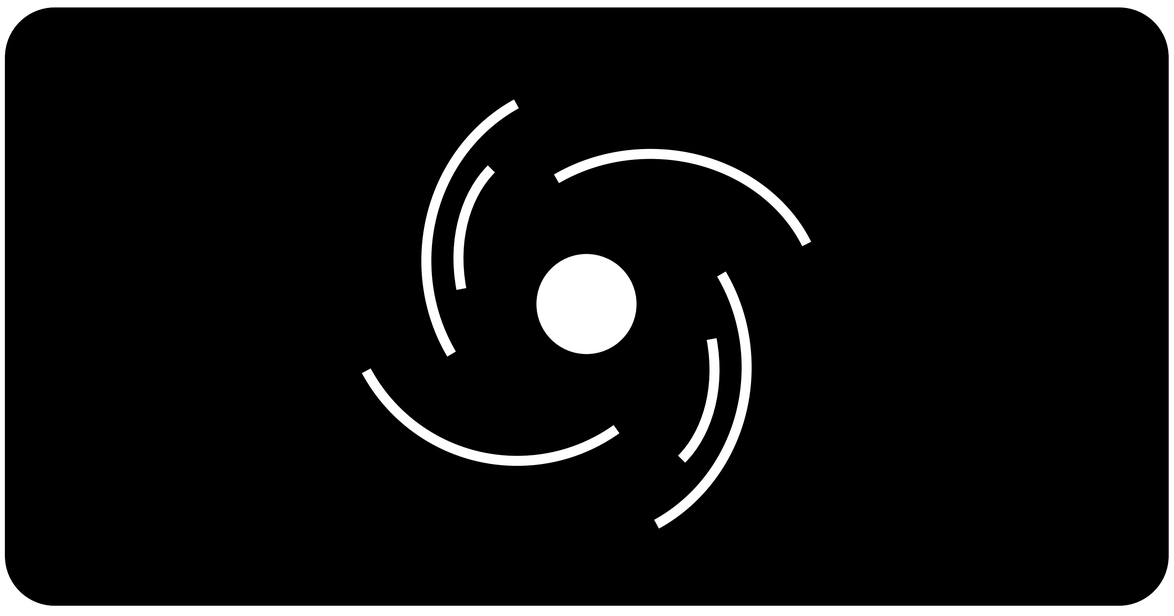

## Smoke detection

FireProtect 2 detects smoke and does not react to water vapour thanks to a bispectral optical sensor with blue and infrared LEDs. LEDs emit light with different wavelengths, which allows the detector to determine the size of the volatile particles and react only to smoke.

The detector's smoke chamber is protected from dust, dirt, and insects. Even if dust enters and settles in the smoke chamber, it does not threaten or impair the detection. The optical system is designed so that non-volatile particles or insects cannot be in two beams simultaneously and cause a false alarm.

## Detection of a rapid temperature rise

Two built-in thermistors are responsible for the reaction to temperature rise. Thermistors are located outside the detector for faster threat detection.

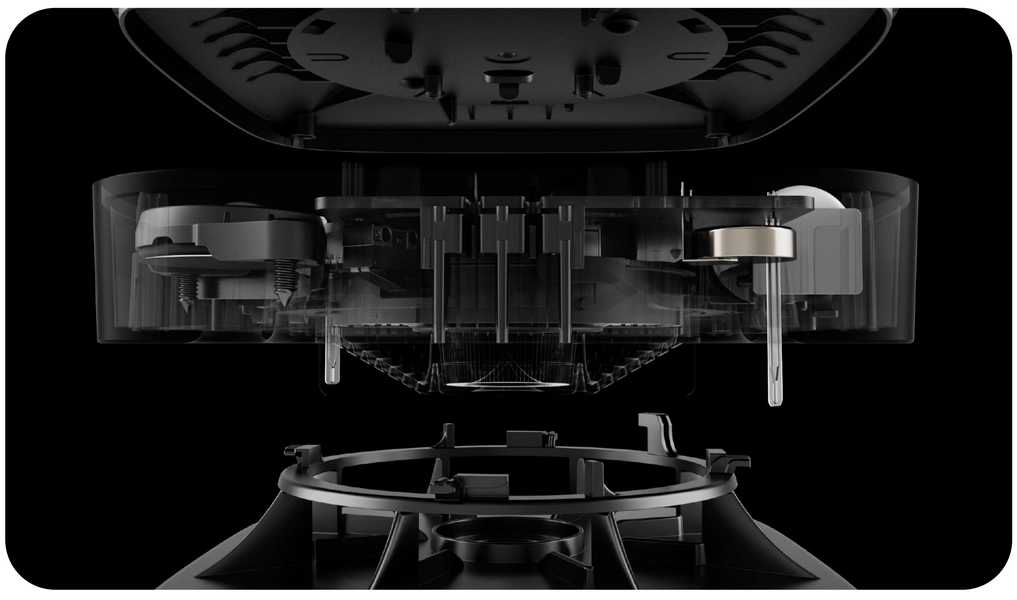

If the room temperature exceeds 64°C or increases at more than 10°C per minute, the detector recognizes this as a rapid temperature rise and raises the alarm. The temperature alarm can trigger even if there is no smoke in the room.

# Interconnected fire detectors alarms

The detector supports interconnected fire alarms. The feature activates built-in sirens of all Ajax fire detectors at the facility if at least one of them is triggered. In case of a fire, this allows alerting as many people as possible.

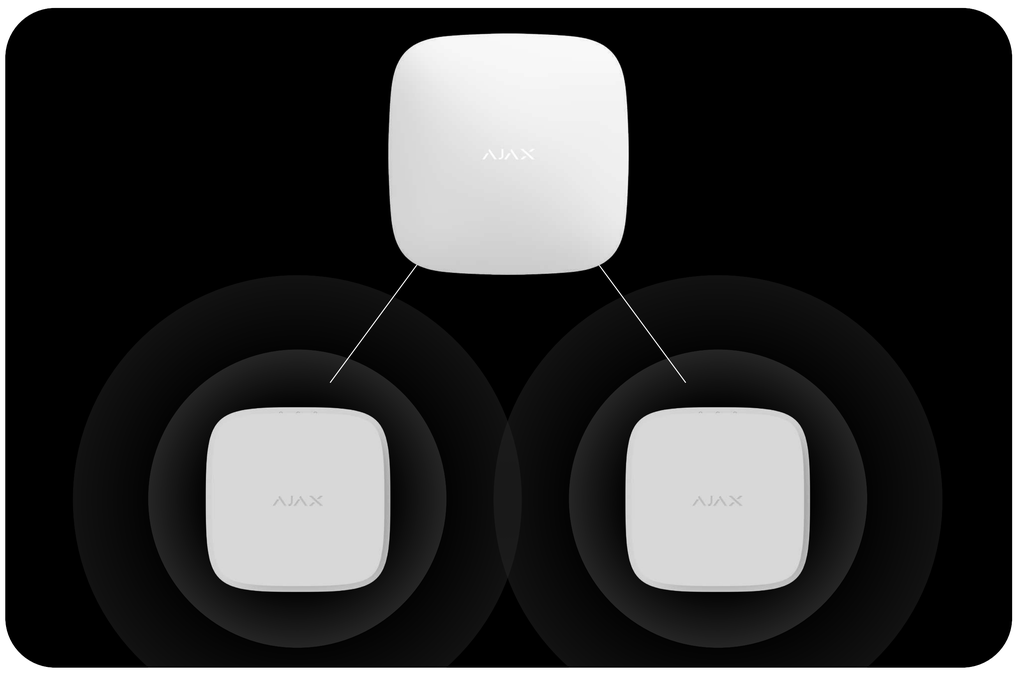

FireProtect 2 detectors have an improved interconnected fire alarm algorithm that activates all fire detectors' sirens within 20 seconds. The function is available only when the detectors operate with the hub.

# Operation without a hub



FireProtect 2 detectors can be used without connecting to an Ajax hub. In this case, the detector notifies fire alarms with a built-in siren and LED indication but does not send a notification to the user's smartphone, Ajax Translator, or PRO Desktop.

# Manual and automatic testing

FireProtect 2 regularly checks the status of batteries and built-in sensors. If a malfunction is detected, the hub will notify users and the monitoring station instantly. And the detector will turn on the light and sound alert by the built-in siren and LEDs. All detector states can be checked at any time in Ajax apps.

The detector supports manual testing mode. It is activated by pressing the device's front panel. The front panel has a mechanical button, which can be pressed either manually or with a floor mop. During the test, the built-in siren and testing of sensors are run. This allows the installer to test the device at any time and to demonstrate to the customer the light and sound indication of the detector for various types of alarms.

# Autonomous operation

Two models of FireProtect 2 (Heat / Smoke) are available — with replaceable and non-replaceable batteries. Detectors with replaceable batteries operate for up to 7 years with pre-installed CR123A batteries. After their discharge, the batteries can be replaced with new ones. The model with non-replaceable batteries works from built-in lithium batteries for at least 10 years. After the batteries are discharged, such a detector should be substituted with a new one.

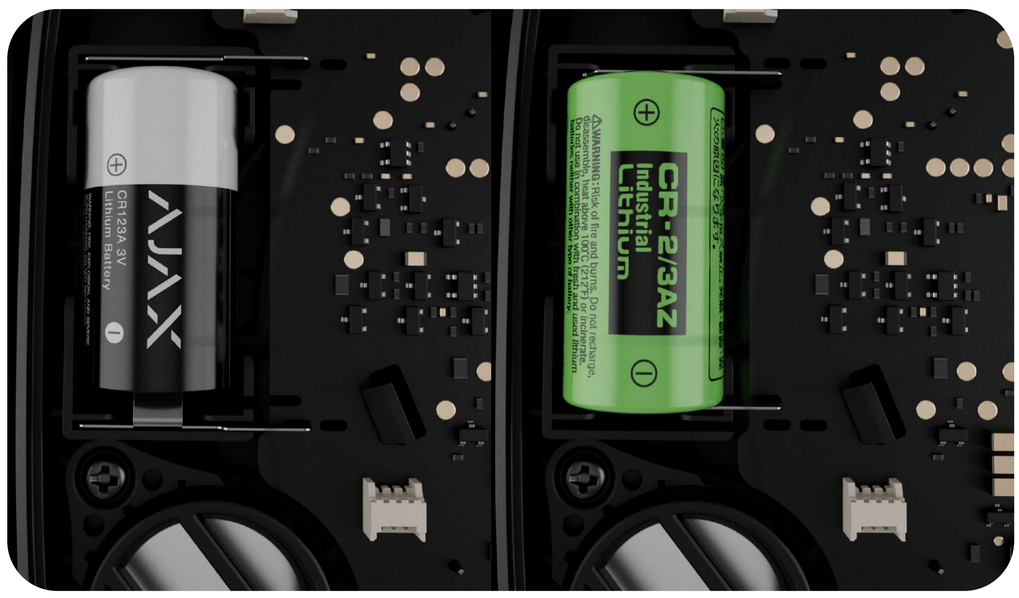





**Jeweller** is a radio protocol for fast and reliable two-way communication between hubs and connected devices. The protocol provides a wireless radio communication range with FireProtect 2 up to 1700 meters. This communication range allows you to install detectors even on large-scale objects.

Jeweller is responsible for transmitting alarms and events. The radio protocol also provides an interconnected fire detectors alarm activation within 20 seconds in a system with any number of FireProtect 2. Thanks to Jeweller, users and the monitoring station can always see the current status of detectors in Ajax apps.

# Quick pairing and installation

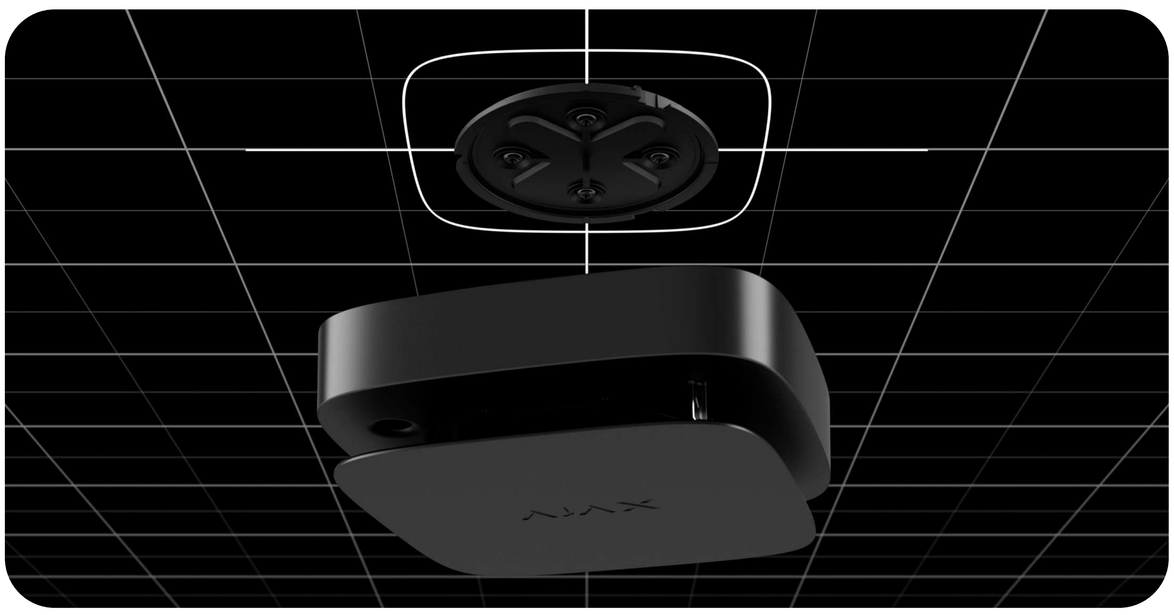


To install FireProtect 2, it is not necessary to disassemble the detector enclosure. Replaceable or non-replaceable batteries are pre-installed, and the SmartBracket mount is removed from the detector without tools. SmartBracket mounting panel has a degree of freedom of 90°. This allows the installer to align the position of the device after installation.

The detector connects to the Ajax security system in less than a minute. An installer needs to open the Ajax app, scan the QR code, and add the device to the room and security group.

# Technical specifications

| | |
|---|---|
| Communication with control panel or range extender | **Jeweller communication technology**<br><br>**Frequency bands**<br>866.0–866.5 MHz<br>868.0–868.6 MHz<br>868.7–869.2 MHz<br>905.0–926.5 MHz<br>915.85–926.5 MHz<br>921.0–922.0 MHz<br>Depends on the region of sales.<br><br>**Maximum effective radiated power (ERP)**<br>Up to 20 mW<br><br>**Communication range**<br>up to 1,700 m<br>Without obstacles. |
| Compatibility | **Hubs**<br>Hub Plus<br>Hub 2 (2G)<br>Hub 2 (4G)<br>Hub 2 Plus<br>Hub Hybrid (2G)<br>Hub Hybrid (4G)<br><br>**Range extenders**<br>ReX<br>ReX 2 |
| Compliance with special fire standards | EN 14604:2005/AC:2008<br>Qmark |
| Smoke detection | **Sensitive element**<br>double-spectrum optical sensor<br>Recognizes smoke by the size of particles in the air.<br><br>**Protection from false alarms**<br>The detector does not react to water vapour.<br><br>**Patented smoke chamber**<br>Protects the smoke sensor from dust, dirt, and insects. |

| | |
|---|---|
| Detection of dangerous temperature | **Sensitive element**<br>**thermistor**<br>According to the requirements for temperature detectors of A1 class of EN 54-5 and BS 5446-2 standards.<br><br>**High temperature Alarm**<br>at temperatures above 64°C<br><br>**Rapid temperature rise Alarm**<br>when the temperature rises more than 10°C in 1 minute or less |
| Additional features | **In-built siren**<br>volume 85 dB (at a distance of 3 meters)<br><br>**Interconnected fire detectors alarms**<br>All fire detectors in the system turn on built-in sirens if at least one of the detectors registers an alarm.<br>The interconnected alarm is activated after no more than 20 seconds.<br><br>**LED indication**<br>green is a power indication<br>Lights up once every 56 seconds.<br><br>yellow is an indication of malfunctions<br>Lights up when malfunctions are detected. For example, in the case of discharged batteries or contamination of the smoke chamber.<br><br>red is an indication of fire alarms<br>Lights up when the detector detects a fire alarm.<br><br>**Button on the front panel of the detector**<br>In normal mode, when pressed, it starts the smoke chamber test.<br><br>In the event of an alarm or malfunction, the pressing turns off the detector sound notification. |

| | |
|---|---|
| Power supply | **For FireProtect 2 RB (Heat/Smoke)**<br>2 × CR123A battery<br>Up to 7 years of battery life.<br><br>**For FireProtect 2 SB (Heat/Smoke)**<br>2 non-replaceable lithium batteries<br>10 years of battery life. |
| Anti-sabotage protection | **Tampering alarm**<br><br>**Protection against spoofing**<br>device authentication<br><br>**Detection of communication failure**<br>within 15 minutes<br>The time to detect communication loss depends on the number of undelivered data packages setting (specified in the Jeweller or Jeweller/Fibra settings). The polling interval is fixed at 300 seconds. |
| Complete set | **For FireProtect 2 RB (Heat/Smoke)**<br>FireProtect 2 RB (Heat/Smoke) Jeweller<br>SmartBracket mounting panel<br>Installation kit<br>2 × CR123A batteries<br>Pre-installed<br>Quick Start Guide<br><br>**For FireProtect 2 SB (Heat/Smoke)**<br>FireProtect 2 SB (Heat/Smoke) Jeweller<br>SmartBracket mounting panel<br>Installation kit<br>Quick Start Guide |
| Enclosure and installation | **Dimensions**<br>124 × 124 × 45 mm<br><br>**Weight**<br>TBC<br>For FireProtect 2 RB (Heat/Smoke).<br><br>TBC<br>For FireProtect 2 SB (Heat/Smoke).<br><br>**Operating temperature range**<br>from 0°C to +50°C<br><br>**Operating humidity**<br>up to 80%<br><br>**Protection class**<br>IP20<br><br>**Colours**<br>Black<br>White |