Smart ANPR Camera (ITC413-PW4D-XXX)

Installation and Configuration Manual

ZHEJIANG DAHUA VISION TECHNOLOGY CO., LTD. V1.0.0

Foreword

Disclaimer

In actual use, you can calculate the arming data by Project Design Tool according to the device model, or send emails to R&D personnel for arming data. The tool calculates the data as if there is a sufficient amount of illumination by default. If the illumination of the site is poor, the data from the on-site test will not reach the value calculated by the tool. So the test results from the on-site test should be chosen over the results from the tool.

Intelligent detection data is closely related to the installation scenario, light, and other factors. When the installation scenario and light are poor, the intelligent detection data can be improved by adjusting the scenario and adding illuminators. When the scenario and light are better, the detection effect might still be somewhat reduced. The test results from the on-site test should be chosen.

Safety Instructions

The following signal words might appear in the manual.

Signal Words	Meaning
DANGER	Indicates a high potential hazard which, if not avoided, will result in death or serious injury.
WARNING	Indicates a medium or low potential hazard which, if not avoided, could result in slight or moderate injury.
CAUTION	Indicates a potential risk which, if not avoided, could result in property damage, data loss, reductions in performance, or unpredictable results.
TIPS	Provides methods to help you solve a problem or save time.
NOTE	Provides additional information as a supplement to the text.

Revision History

Version	Revision Content	Release Time
V1.0.0	First release.	June 2022
V1.0.1	Adjust the Detection Width (Change from 7m to 6-8m)	June 2023

Table of Contents

Foreword ..... **I**
1 Overview **1**
1.1 Purpose 1
1.2 Front-end System Structure 1
1.2.1 Front–end Device Layout 1
1.2.2 Front–end Device List 1
2 Installation **3**
2.1 Single-camera Solution Description 3
2.2 Installation 5
2.2.1 Refuge Island and Guard Booth 5
2.2.2 Installing Cameras 9
2.2.3 Installing Anti-smashing Radars 12
2.2.4 Installing Barrier Gates 14
3 System Wiring **15**
3.1 Camera Wiring 15
3.2 Barrier Gate Wiring 16
3.3 Display Wiring 19
4 System Configuration **21**
4.1 Configuring the Software 21
4.1.1 Device initialization 21
4.1.2 Drawing Rules 22
4.1.3 Configuring Barrier Control 24
4.1.4 Setting RS-485 LED Display 26
4.1.5 Configuring Voice Broadcast 28
4.1.6 Wiegand 31
4.1.7 IVS 32
4.2 Configuring Remote Control of Barrier Gate 33
4.2.1 Configuring Remote Control of DHI-IPMECD-203X Barrier Gate 33
4.2.2 Configuring Remote Control of DHI-IPMECD-302X Barrier Gate 35
4.3 Checking System Functions 35
5 FAQ **37**

1 Overview

1.1 Purpose

This document provides construction standards for sales, technical supports, and construction engineers to ensure that the system construction meets standards.

1.2 Front-end System Structure

1.2.1 Front–end Device Layout

The following takes single-camera solution as an example (one camera at the entrance and one at the exit).

Figure 1-1 Front–end devices

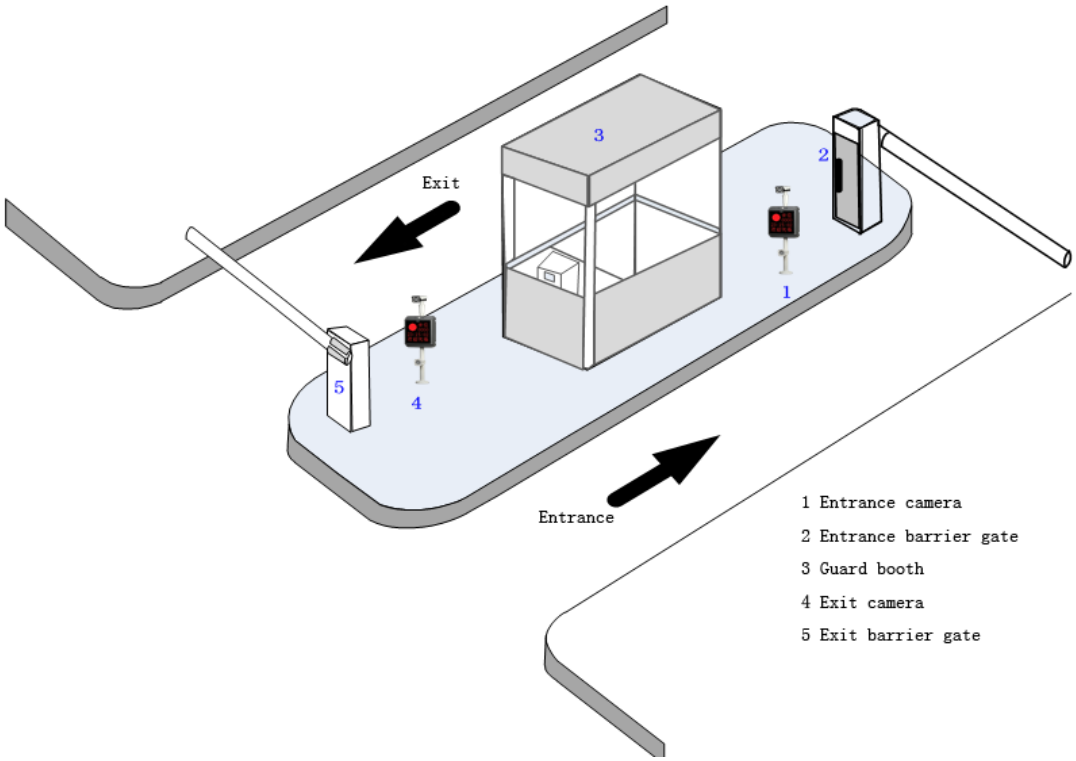

1.2.2 Front–end Device List

The front-end devices of the entrance and exit management system for the card-free parking lot is mainly composed of entrance/exit cameras, anti-smashing radars, barrier gates, guard booths,

charging computers, cabinets, and more. The following takes the scenario with one entrance and one exit as an example, and the system list is shown in Table 1-1.

Table 1-1 Front-end device list for card-free parking lot with one entrance and one exit

No.	Item	Model	Quantity	Remarks
1	Smart ANPR Camera	DHI-ITC413-PW4D-Z1 DHI-ITC413-PW4D-IZ1 DHI-ITC413-PW4D-Z3 DHI-ITC413-PW4D-IZ3	2	Select the model according to the user's requirements.
2	Display	DHI-ITSXS-1201-44	2	Select as needed.
3	Barrier gate	DHI-IPMECD-203X and DHI-IPMECD-302X series	2	Select as needed.
4	79 GHz anti-smashing radar	DHI-ITSJC-2303-DC12	2	Select as needed.

2 Installation

This chapter introduces the standard entrance and exit scenarios with 413 series cameras. For details on camera installation, see Table 2-1.

2.1 Single-camera Solution Description

The card-free system is an entrance and exit management system based on vehicle license plates. The license plate is extracted by the entrance and exit cameras through video analysis during vehicle passing. The camera capture effect directly affects the system charing. In actual use, video capture is used to trigger the radar to prevent smashing in some entrance and exit passages, instead of the traditional coil solution. This solution features no damage to the road surface, simple wiring between devices, and convenient site construction, which greatly reduces the construction difficulty and shortens the construction period and cost.

Figure 2-1 Device installation diagram

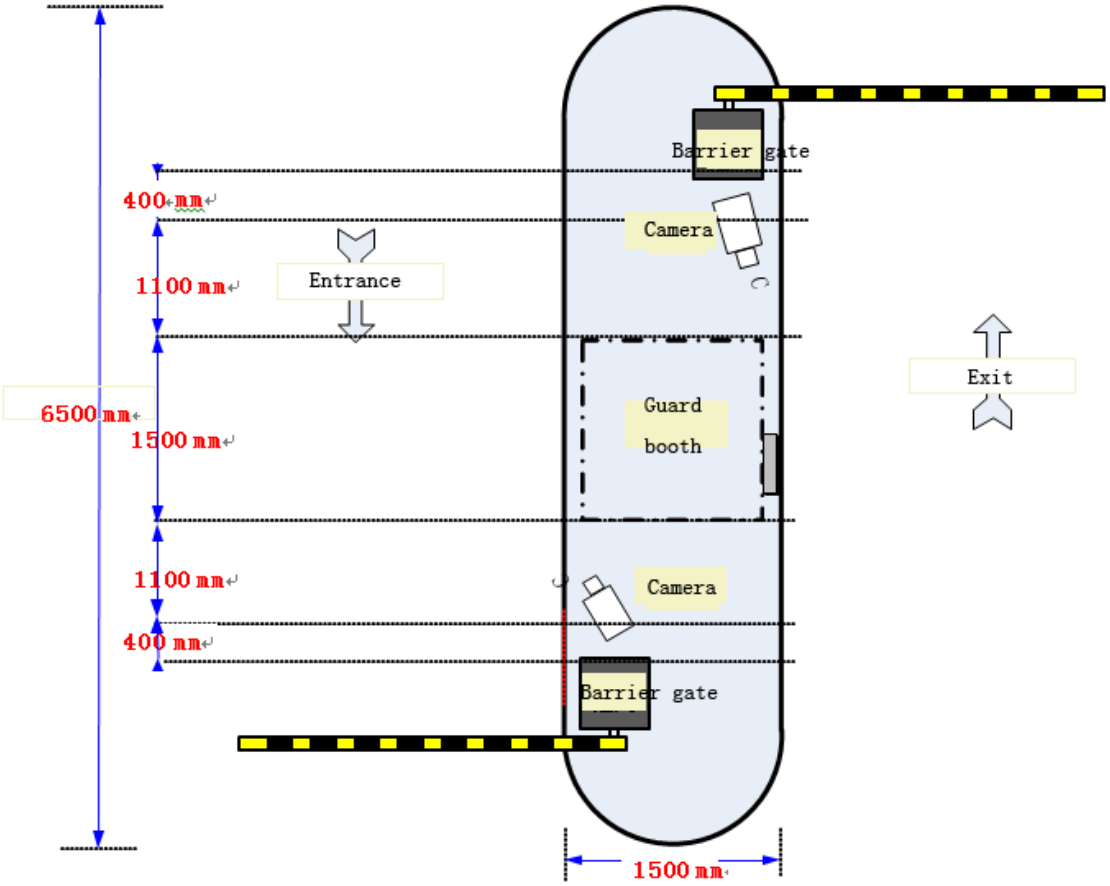

- The total length of the refuge island in the device installation area is 6500 mm, which can be adjusted according to the actual situation on site.
- The two barrier gates are installed on both sides of the refuge island in parallel.

- The distance between the exit barrier gate and the exit camera is 400 mm.
- The distance between the exit camera and the guard booth side is 1100 mm.
- The guard booth diameter is 1500 mm.
- The distance between the entrance camera and the guard booth side is 1100 mm
- The distance between the entrance camera and the entrance barrier gate is 400 mm.
- The distance between the capture line and the entrance/exit camera is 4000 mm.
- Standard lane width: <4000 mm

Figure 2-2 Wiring diagram of a single camera in one entrance/exit scenarios

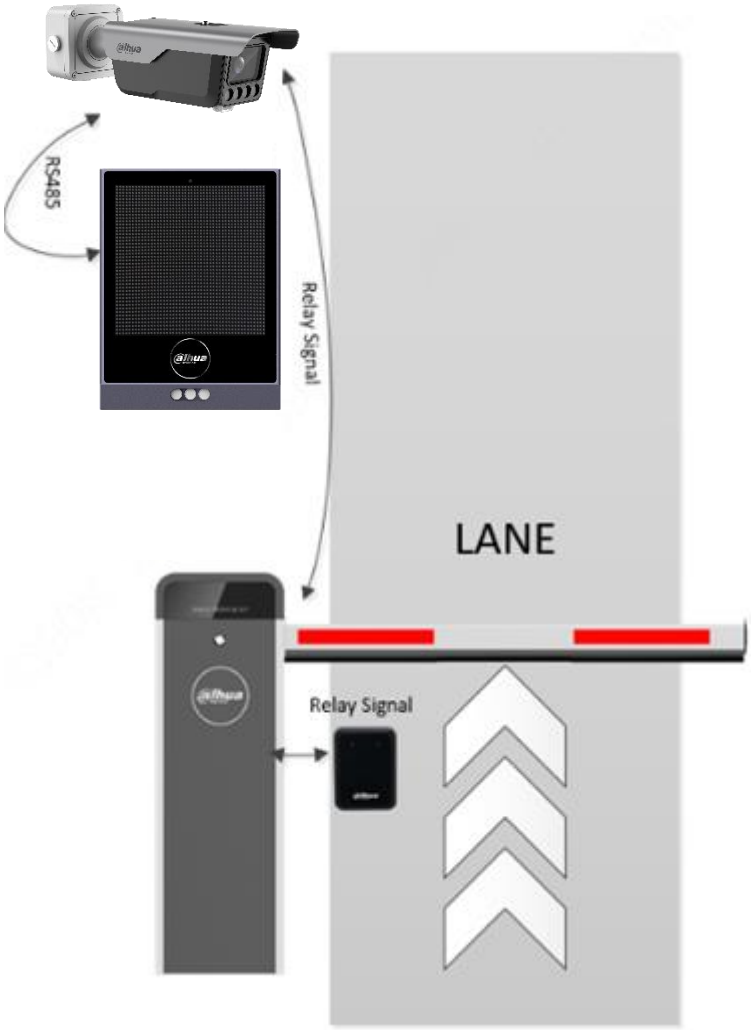

2.2 Installation

2.2.1 Refuge Island and Guard Booth

2.2.1.1 Selecting Refuge Island Locations

To select the location of refuge island, you need to consider the capture and recognition effect of cameras first, because many factors will affect the camera recognition effect, such as the channel width exceeding the camera monitoring capability, and inappropriate camera installation point. These are physical factors. Problems such as whether the camera monitoring image covers the license plate or whether the angle of the license plate meets the recognition conditions cannot be solved from the technical level. Therefore, it is necessary to plan well before the camera is installed. The following are important precautions before camera installation:

- The camera should be placed in a location that meets the following conditions: A vehicle must be able to make a complete turn into the passage of the parking lot; its front must face straight once it is 4 meters away from the camera. The camera capture distance is 4–6 meters, and the best capture distance is 4 meters away from the camera. In this solution, we take the capture line of 4 m away from the camera as the standard, and you can adjust the capture line as needed. There is a turning process when the vehicle enters or exits the passage of the parking lot. During turning, the license plate is at a certain angle with the camera, which causes the camera unable to face straight the license plate or the angle is too large, which affects the recognition effect. Therefore, the capture line of the camera should be configured at the place where the vehicle can make a complete turn in to the passage, and the camera can face the license plate. After determining the camera capture line, the camera can be installed 4 meters away from the capture line, as shown in Figure 2-3.

Figure 2-3 Camera location plan

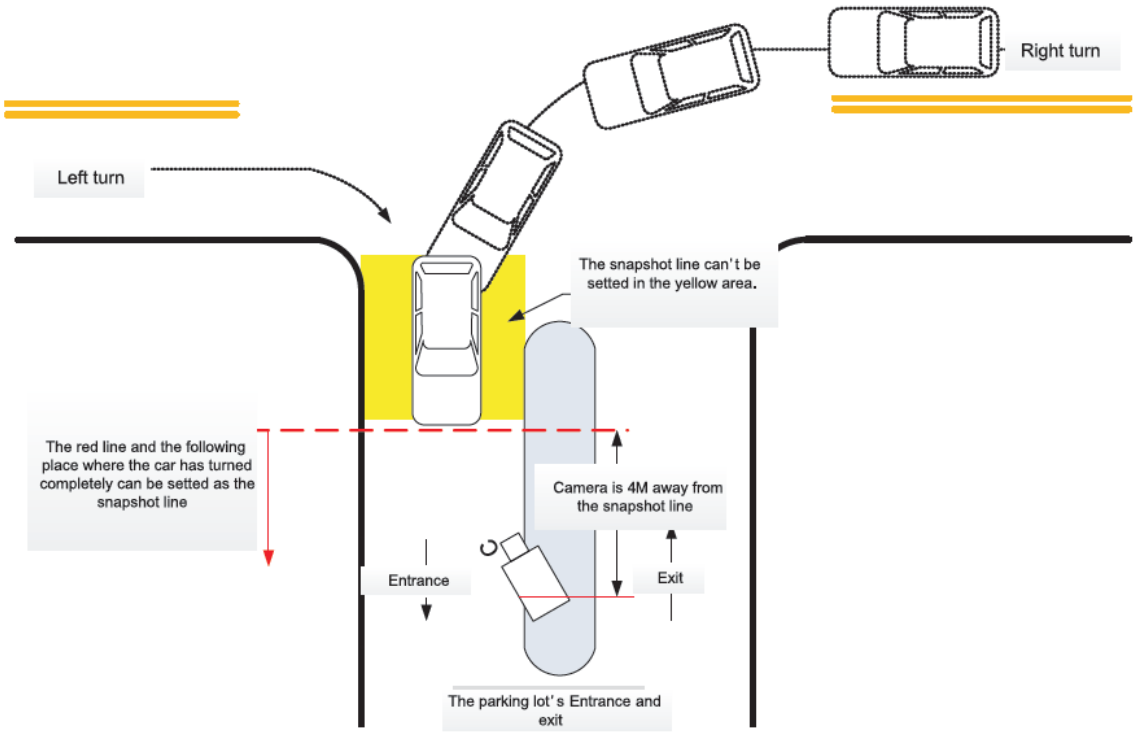

- The maximum passage width covered by the camera is 4 meters. If the passage width is larger than 4 meters, the channel should be physically isolated to make it meet the requirement.
- It is required that the distance between the camera mounting bracket and the passage boundary is less than 0.15 meters, as shown in Figure 2-4.

Figure 2-4 Camera and passage requirements

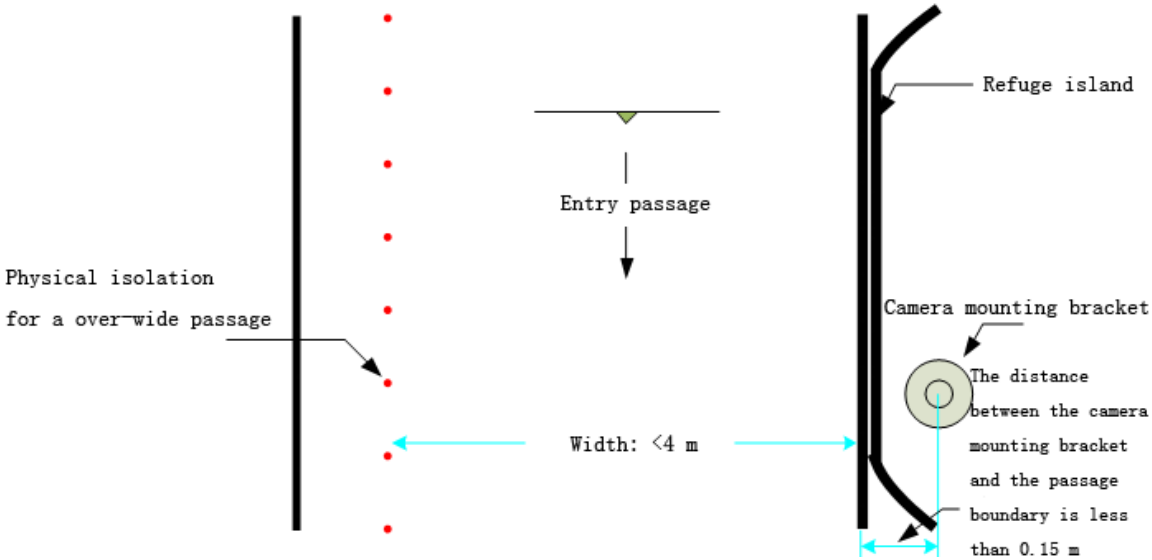

- In addition, you also need to pay attention to factors such as the width of the reserved passage, the width of the refuge island, and the installation requirements of the devices installed on slopes

2.2.1.2 Specifications

Figure 2-5 Refuge island specifications

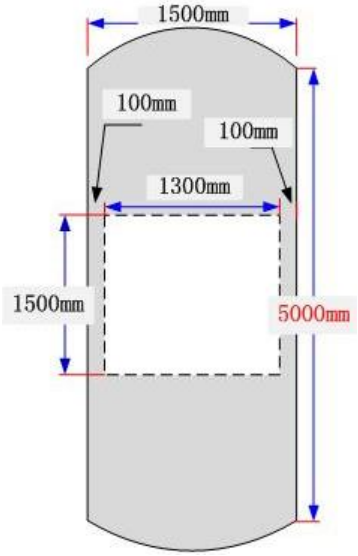

Figure 2-6 Refuge island and guard booth specifications

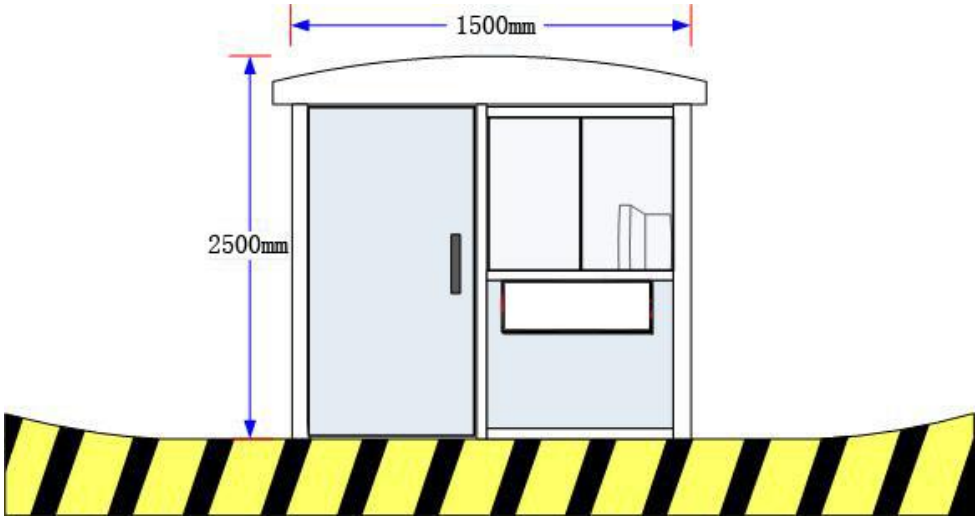

2.2.1.3 Manufacturing Craft of Refuge Island

⚠

When making the refuge island, you need to reserve the conduit, otherwise the conduit cannot be embeded in later stages. For details on conduit location, specification, and quantity, see Figure 2-7

Requirements of refuge island craft:

- The refuge island foundation should be more than 10 cm larger than the device dimensions to prevent the foundation from bursting when affixing the device with expansion screws.
- The height of refuge island foundation should be more than 15 cm, which can provide necessary protection for devices.

- Material: 425# silicate cement and medium sand. The ratio of cement to sand is 1:2. The refuge island cannot be made with materials such as soil, stones, and bricks, which are not strong enough.
- Ground material requirements:
  - ◇ Cement subgrade: The refuge island foundation can be directly laid on it. However, on the bottom of refuge island, steel bars should be placed every 25 cm in a star-shaped structure for connection. The diameter of the steel bars should be more than Φ20 mm, and it should not be less than 5 cm deep into both the refuge island and underground.
  - ◇ Asphalt subgrade: The refuge island foundation can be directly laid on it, but on the bottom of the refuge island, steel bars should be placed every 25 cm in a star-shaped structure for connection. The diameter of the steel bars should be over Φ20 mm, and the steel bar should not be less than 5 cm deep into the refuge island and 20 cm underground.
  - ◇ Soil and other subgrade: a foundation pit should be dug for construction, with a depth of more than 30 cm.

2.2.1.4 Conduit Layout of Refuge Island

The conduit of entrance and exit management system for a single-camera solution is shown in the following figure.

Figure 2-7 Conduit layout of refuge island for single-camera solution

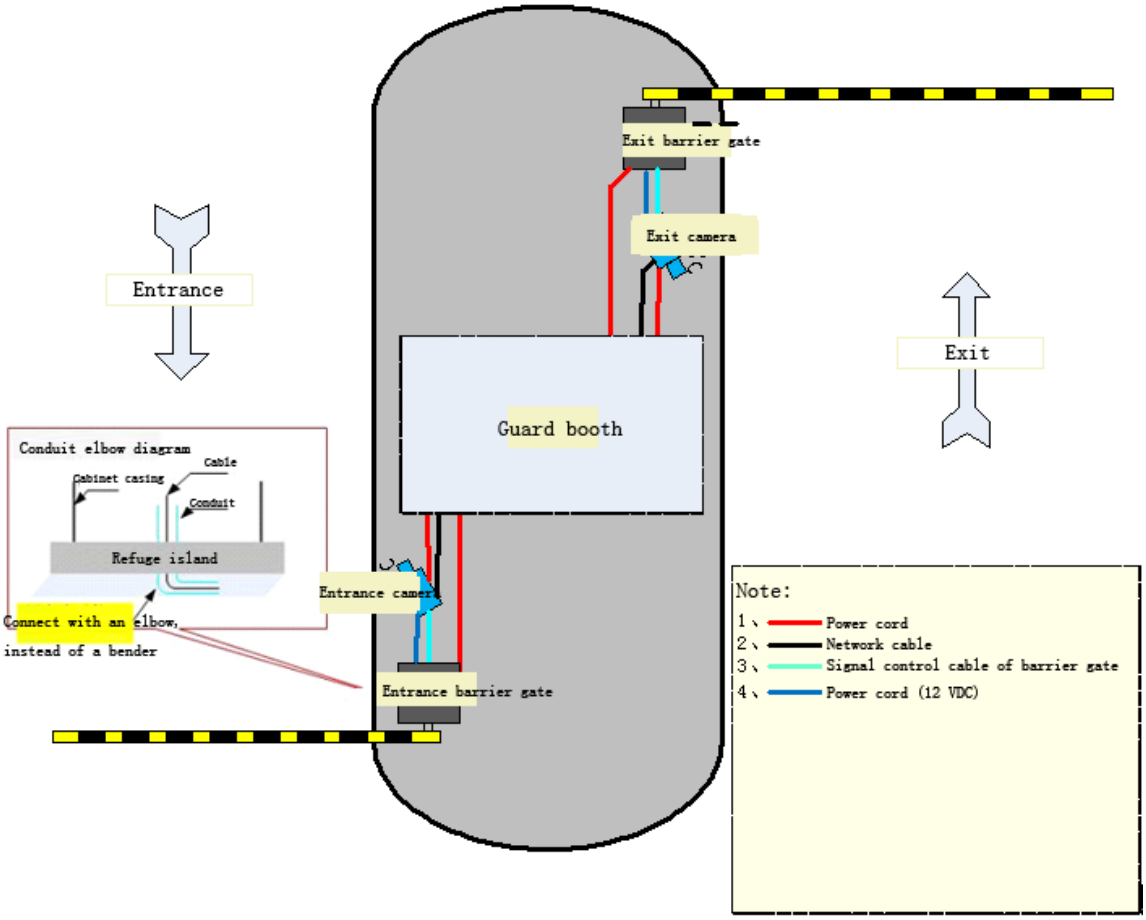

- We recommend you use PVC pipes on the cement island, and KBG pipes under the island. You can select pipes with inner diameters greater than 70% of the total wiring area.
- Separately install pipes for strong and weak currents.
- The conduit elbow should be butted and sealed with glue, and the elbow must not be bent by bender.
- The conduit ports should be temporarily blocked to avoid being blocked by debris.
- The iron wire can be preset in the conduit to facilitate subsequent cable threading.
- The preset conduit should be kept away from the installation location of devices, to avoid using expansion screws later.
- From camera to guard booth: 1 × power cord; 1 × network cable.
- From camera to barrier gate: 1 × barrier opening control cable.
- From barrier gate to guard booth: 1 × power cord
- We recommend you use RVV3 × 1.5^2 or equivalent power cords.
- We recommend you use Category 5 network cables.
- We recommend you use RVVP8 × 0.5^2 or equivalent signal cables.
- We recommend you use RVV2 × 1^2 or equivalent 12 VDC power cords.

2.2.2 Installing Cameras

When installing cameras, you need to consider the lens angle, license plate angle, and license plate pixels.

For front mount, the angle between the camera lens and the horizontal ground should be less than 30°.The relationship between the height (h) and the capture distance (x): x ≥1.7h.

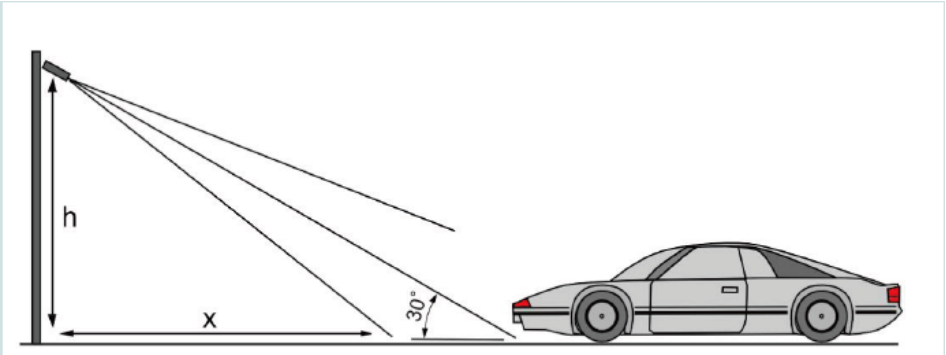

For side mount, the angle between the camera lens and the lane line should be less than 30°. If the distance between the camera and the farthest lane line of the monitoring lane is h, and the capture distance is x, and their relationship must be x ≥ 1.7h. Otherwise, the algorithm recognition will be affected.

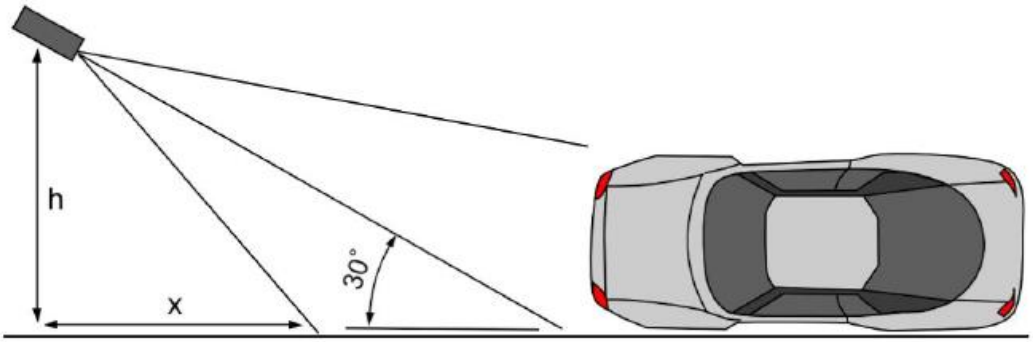

The license plate angle must not be larger than 5°.

The pixels of license plate must meet the requirement of algorithm: A single-layer license plate is not less than 140 pixels; a double-layer license plate is not less than 80 pixels.

Table 2-1 Recommended installation scenarios

Product Series	Installation Height	Capture Distance	Detection Width
ITC413-PW4D-(I)Z1	1.2 m	3–8 m	3–4 m
	1.5 m	4–8 m	
	1.8 m	4.2–8 m	
	2 m	4.5–8 m	
ITC413-PW4D-(I)Z3	2 m	6–10 m	3–4 m
	2.5 m	6–12 m	
	3 m	6–15 m	
	3.5 m	6–17 m	
	4 m	7–19.5 m	
	4.5 m	8–20 m	
	5 m	8.5–20 m	
	5.5 m	9.5–20 m	
	6 m	10–20 m	
	3 m	12–15 m	6-8 m
	3.5 m	12–17 m	
	4 m-6 m	12–20 m	

The ambient brightness must be 10 lux or more. In night, cloudy, and other scenarios with insufficient light, you need to add illuminators. If the license plate does not reflect light, we recommend you use white light. The license plate should not be less than 140 pixels. Otherwise, the recognition effect might be affected.

2.2.2.2 Pole Mount

Procedure

Step 1 Fix the pole mount bracket (sold separately) to the pole.

Step 2 Use 3 M6 screws to fix the junction box to the pole mount bracket.

Step 3 Tighten the screws on the end of the camera to fix it to the junction box.

Figure 2-8 Pole mount

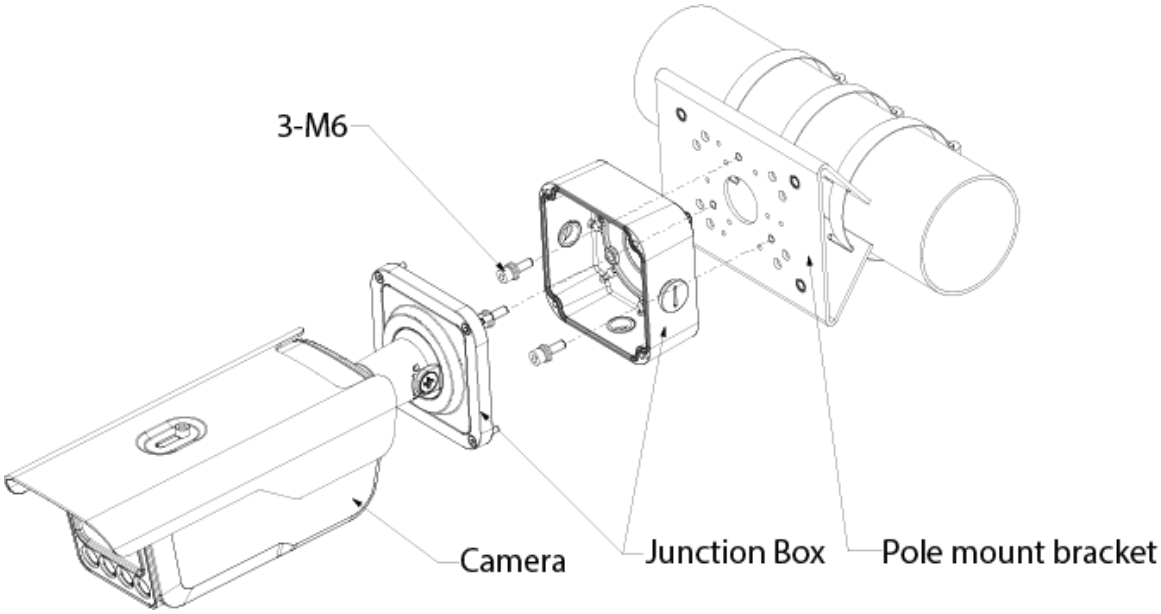

2.2.2.3 Wall Mount

Procedure

Step 1 Drill holes on the wall according to the holes on the junction box.

Step 2 Use 3 ST6.3 expansion screws to fix junction box to the wall.

Step 3 Tighten the screws on the end of the camera to fix it to the junction box.

Figure 2-9 Wall mount

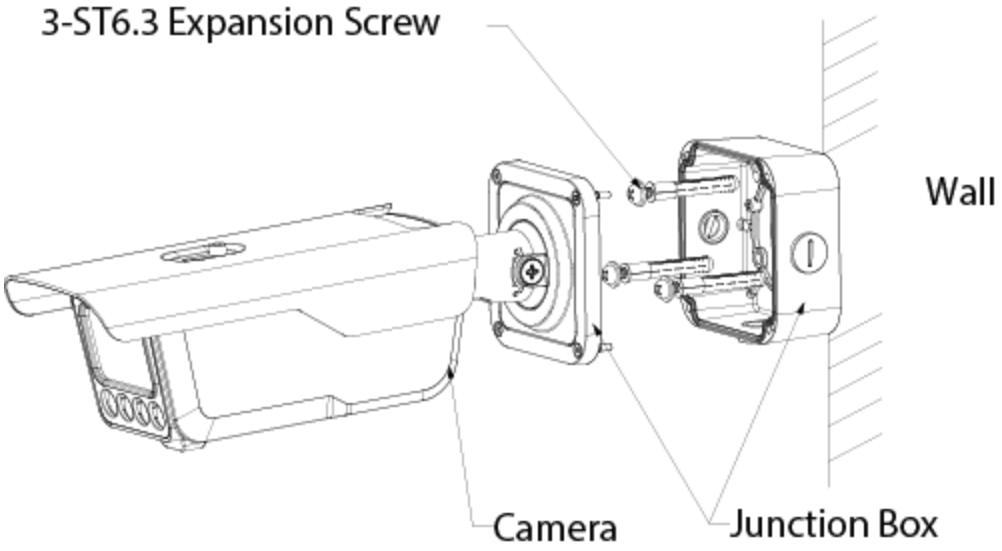

2.2.2.4 Ceiling Mount

Procedure

Step 1 Drill holes on the ceiling according to the holes on the junction box.

Step 2 Use 3 ST6.3 expansion screws to fix the junction box to the ceiling.

Step 3 Tighten the screws on the end of the camera to fix it to the junction box.

Figure 2-10 Ceiling mount

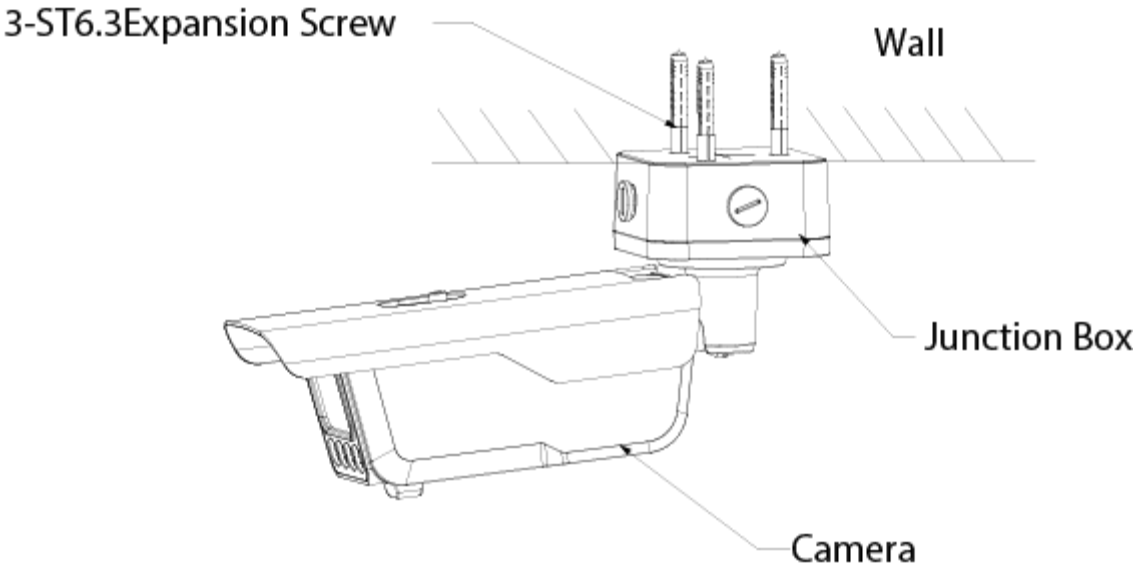

2.2.3 Installing Anti-smashing Radars

In the vertical direction of the lane, install the anti-smashing radar on the box below the automatic barrier arm.

Figure 2-11 Install the radar

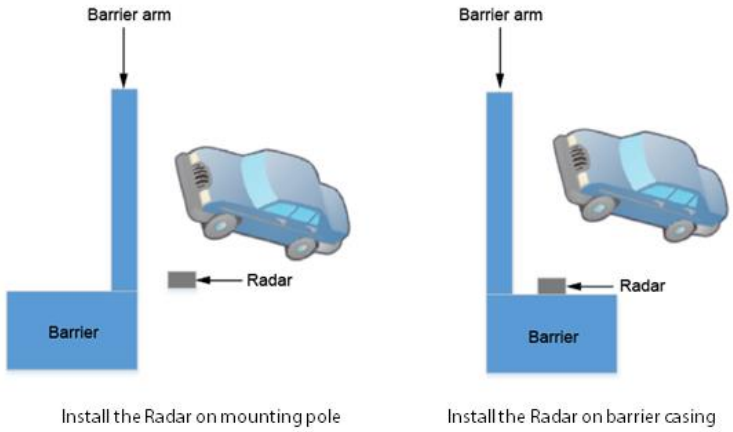

- The barrier box must be fixed firmly, and the tilt angle of the box should be less than 5°.
- When installing a guardrail at one side of the lane, secure the guardrail to prevent it from moving back-and-forth or shaking.
- Do not place any objects within the radar detection range (excluding the barrier arm).
- After the environment changes, calibrate the radar in time.
- The radar is not suitable for scenarios where the vehicle turns in and out at a large angle. Large angle: When the vehicle passes through the anti-smashing radar trigger area, the angle between the vehicle and the road is greater than 30 degrees.
- Installation height: We recommend that the lower edge of the radar be 0.6 m above the ground (0.7 m above the ground when there are large vehicles.
- After the 79 GHz radar (applicable to the all series of barrier gate) is installed, parameters such as actual width, detection area bandwidth, and barrier closing time can be adjusted directly through the configuration software or mobile app.
- When there are many large vehicles, just adjust the installation height to 70 cm. You can only configure parameters such as lane width and arm closing time on the configuration software, and leave other parameters as default. Install the configuration software to a laptop, and then bring the laptop to the radar installation site.
- For details, see the user's manual and FAQ of the barrier gate and radar.

2.2.4 Installing Barrier Gates

Figure 2-12 DHI-IPMECD-203X barrier gate box base

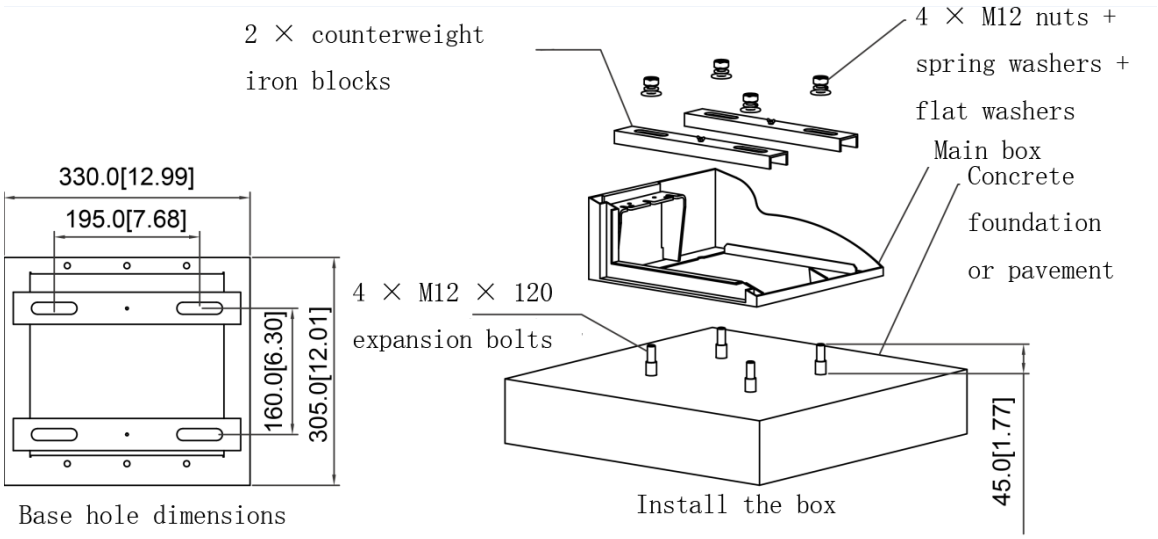

Figure 2-13 DHI-IPMECD-303X barrier gate box base

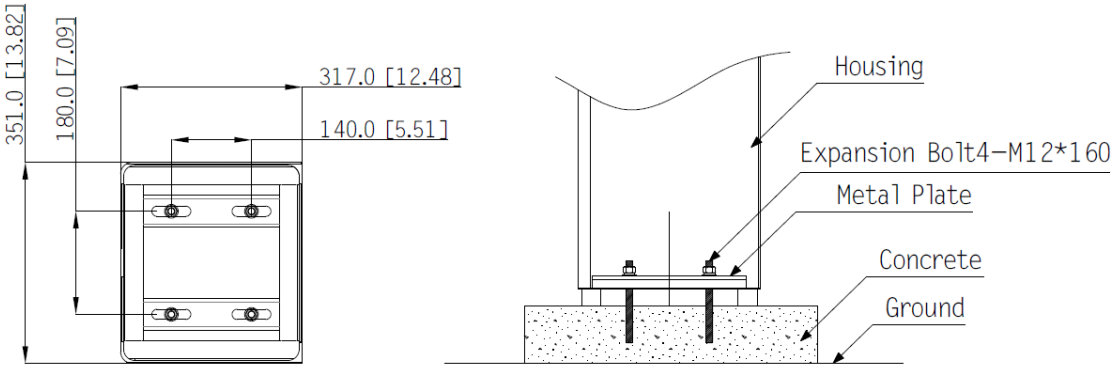

- For details on barrier gate installation positions, see Figure 2-1.
- The installation surface of the foundation on which the barrier gate is installed should be level, which can ensure that the vehicle stopper box fits the foundation and enhances the stress of the box.
- When drilling a hole, a single drilling operation is required. Repeated drilling will reduce the fixing effect of expansion bolts, which will affect the service life of the barrier gate.
- During installation, make sure that the barrier gate box is level.
- The installation details are subject to the actual construction requirements of the barrier gate.

3 System Wiring

Ground all the ground holes on the devices used in the system to improve device reliability.

3.1 Camera Wiring

Figure 3-1 External cables

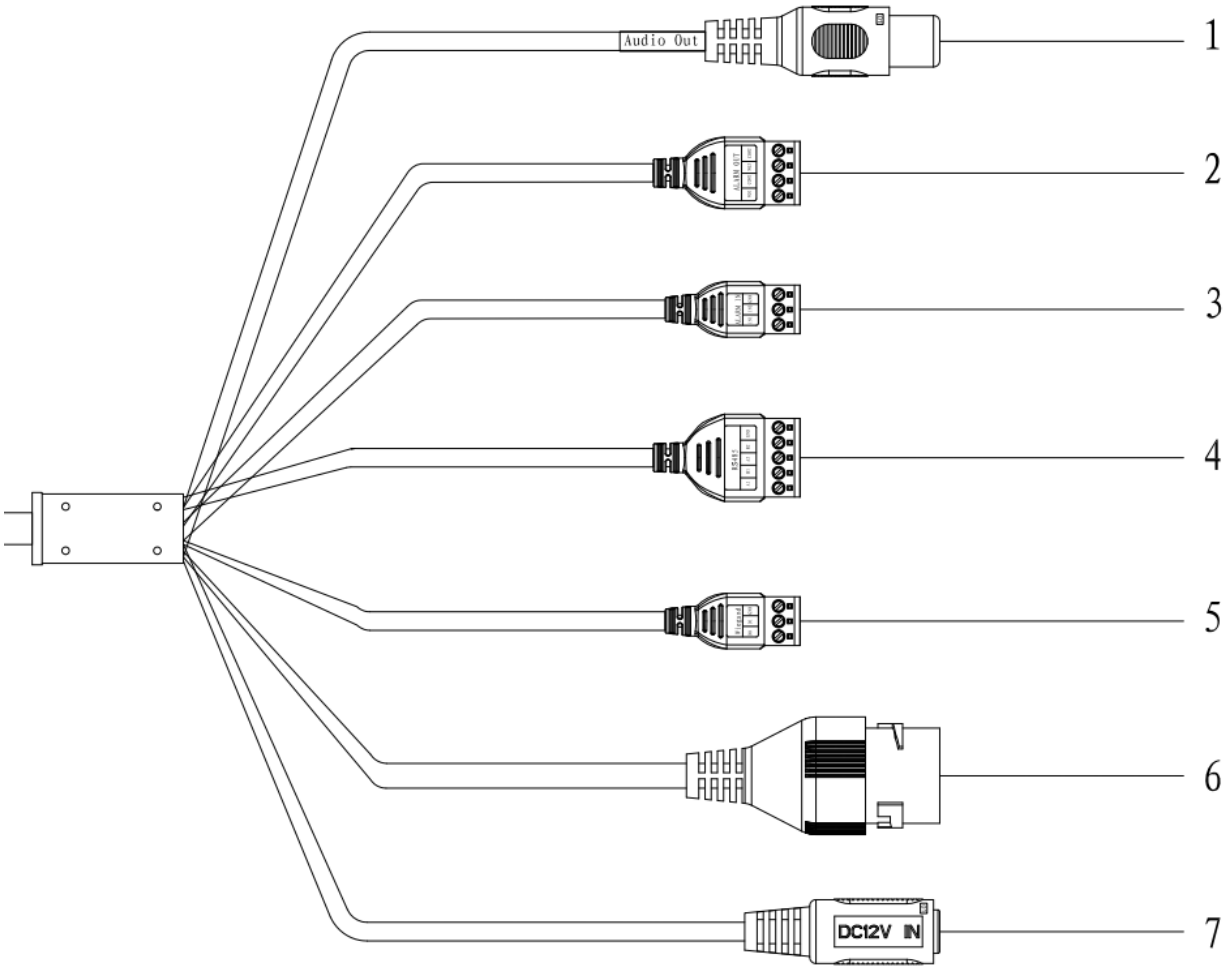

Table 3-1 Cable parameters

No.	Function	Description	Image
1	AUDIO OUT	The camera sends out audio signal through this port.	

No.	Function	Description	Image
2	Alarm out	Alarm output, connecting to barrier, and alarm output devices such as alarm light.	
3	Alarm in	Alarm input, connecting to vehicle detector, IR detector, induction loop, and more.	
4	RS-485	Connects to displays and other external devices.	
5	Wiegand	Connects and sends number plates to access controller.	
6	LAN	Connects to a network. It also supports PoE power supply.	
7	12 VDC	Connects to 12 VDC power supply. ⚠ Device damage will occur if power is not supplied correctly.	

3.2 Barrier Gate Wiring

For DHI-IPMECD-203X barrier gates, you can refer to Figure 3-2 for wiring of the arm opening control cables. For DHI-IPMECD-203X barrier gate, to control the opening of the barrier gate, connect **NO1** cable of the camera to **OPEN** port (port 10 on the terminal), and **COM1** cable to **GND** port (port 12 on the terminal) of the barrier gate motherboard. Connect the red cable of the anti-smashing radar to **DC12 V+** port (port 16 on the terminal); the black cable to **OUT-** port (port 17 on the terminal); the brown cable to port 13 on the terminal; yellow cable to **GND** port (port 15 on the terminal) of the motherboard.

Figure 3-2 Connect the camera to DHI-IPMECD-203X barrier gate

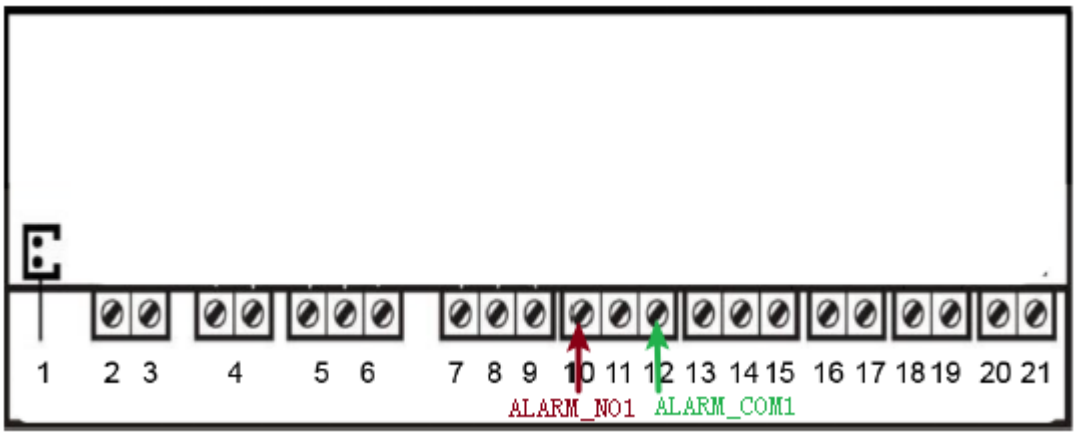

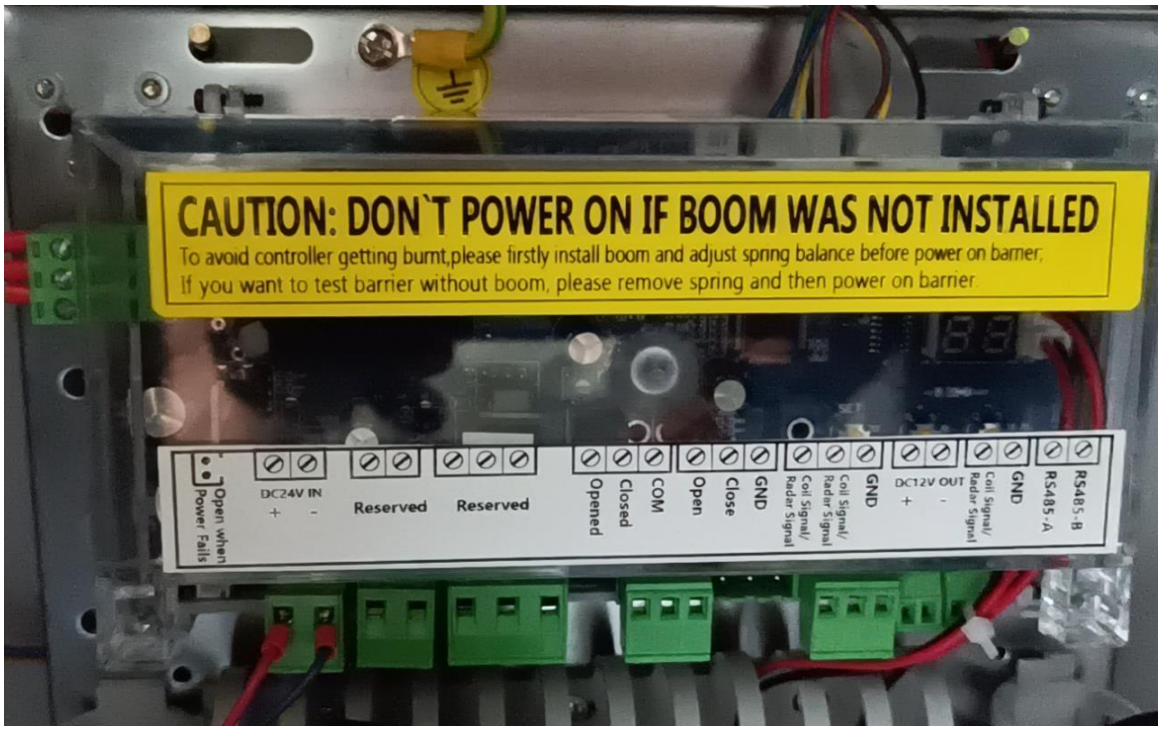

For DHI-IPMECD-302X barrier gate, connect **NO1** cable of the camera to **NO1** port (port 21 on the terminal), and **COM1** cable to **NC1** port (port 19 on the terminal) of the barrier gate motherboard. Connect the red cable of the anti-smashing radar to **+12 V** port (port 15 on the terminal); the black cable to **GND** port (port 16 on the terminal); the brown cable to port 17 on the terminal; yellow cable to port 18 on the terminal of the motherboard.

Figure 3-3 Connect the camera to DHI-IPMECD-302X barrier gate

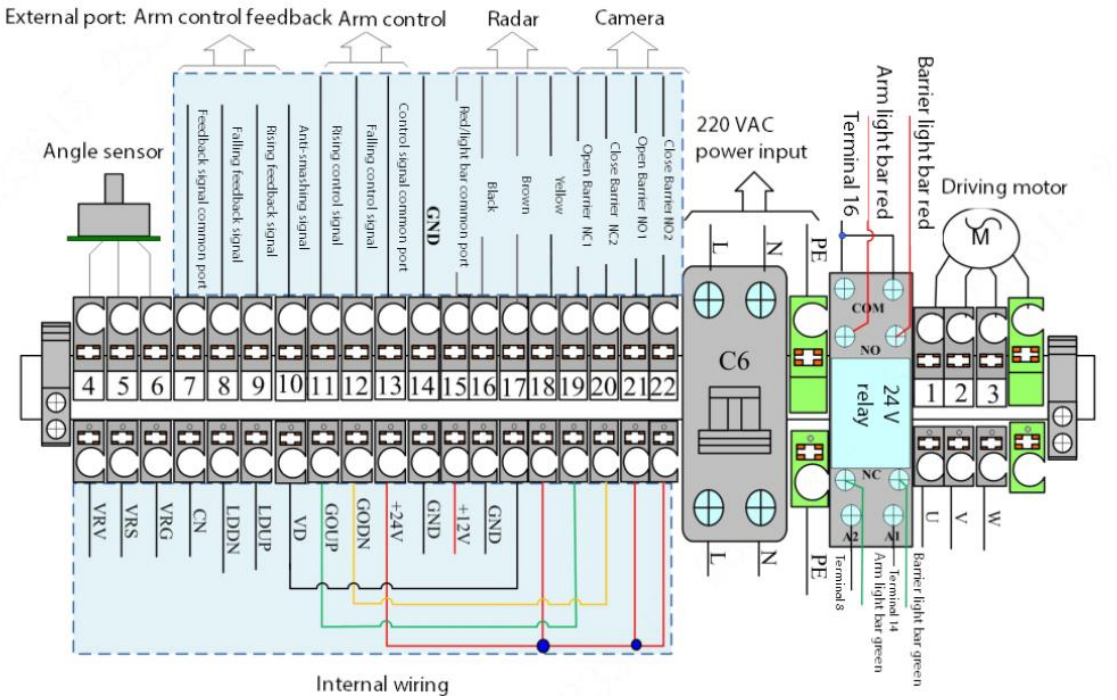

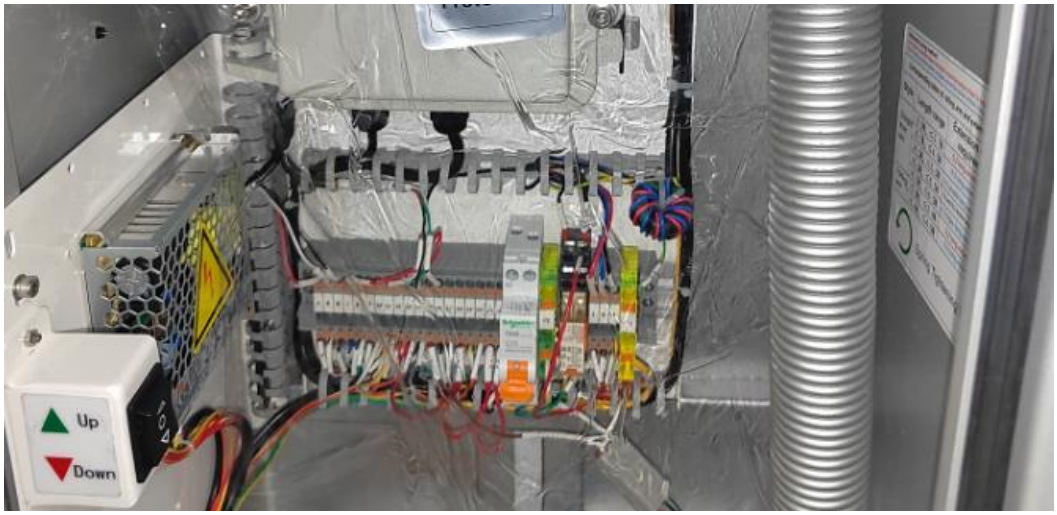

Figure 3-4 Anti-smashing radar

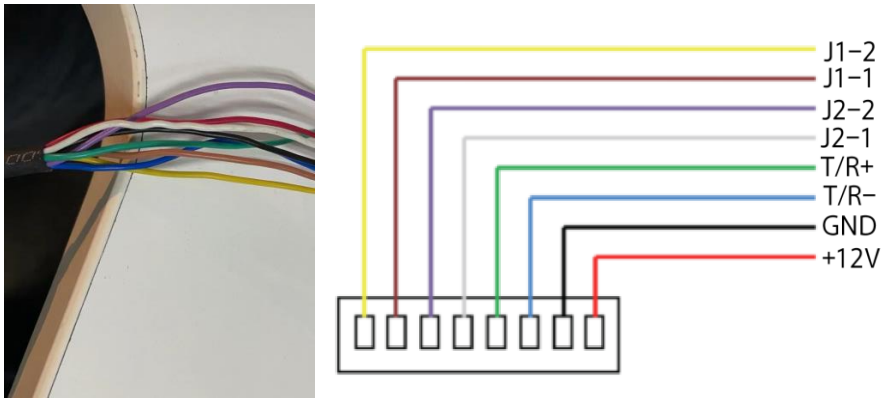

For details on the wiring of barrier gate and anti-smashing radar, see corresponding user's manual and other product documents.

3.3 Display Wiring

The external cables of the display are shown in the following figure, including the power cable and the signal cable. The power cable is directly connected to the power supply to supply power to the display screen, and the signal cable is connected to the camera.

Figure 3-5 Cable

Table 3-2 Description of signal cable

No.	Description
1	Audio +
2	Audio –
3	RS-485A
4	RS-485B

Use the cables in the display accessory package to connect the display to the camera, including the audio cable and the RS–485 cable. Connect the display signal cable to the camera's audio output (AUDIO OUT) and RS-485 cables.

Figure 3-6 Connect the display to the camera

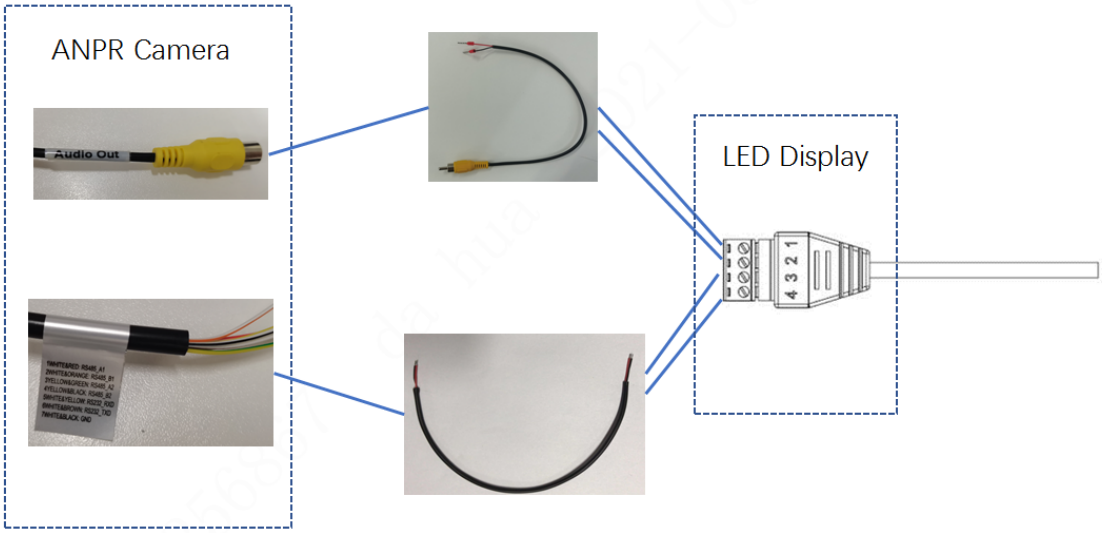

For details, see corresponding data of the display.

4 System Configuration

4.1 Configuring the Software

4.1.1 Device initialization

The Camera is delivered uninitialized by default. You need to initialize it, and change its password before further operations.

Before initialization, make sure that both PC IP, and device IP are on the same network segment, otherwise it might fail to enter the initialization page.

Step 1 Set IP address, subnet mask, and gateway of PC, and device respectively.

- If there is no router in the network, distribute IP address of the same segment.
- If there is router in the network, configure the corresponding gateway, and subnet mask.

The IP address is 192.168.1.108 by default.

Step2 Use ping ***. ***. ***. *** (device IP address) to check whether network is connected.

Step 3 Open browser, enter the IP address of the Camera in the address bar, and then press the Enter key.

Figure 4-1 Device initialization

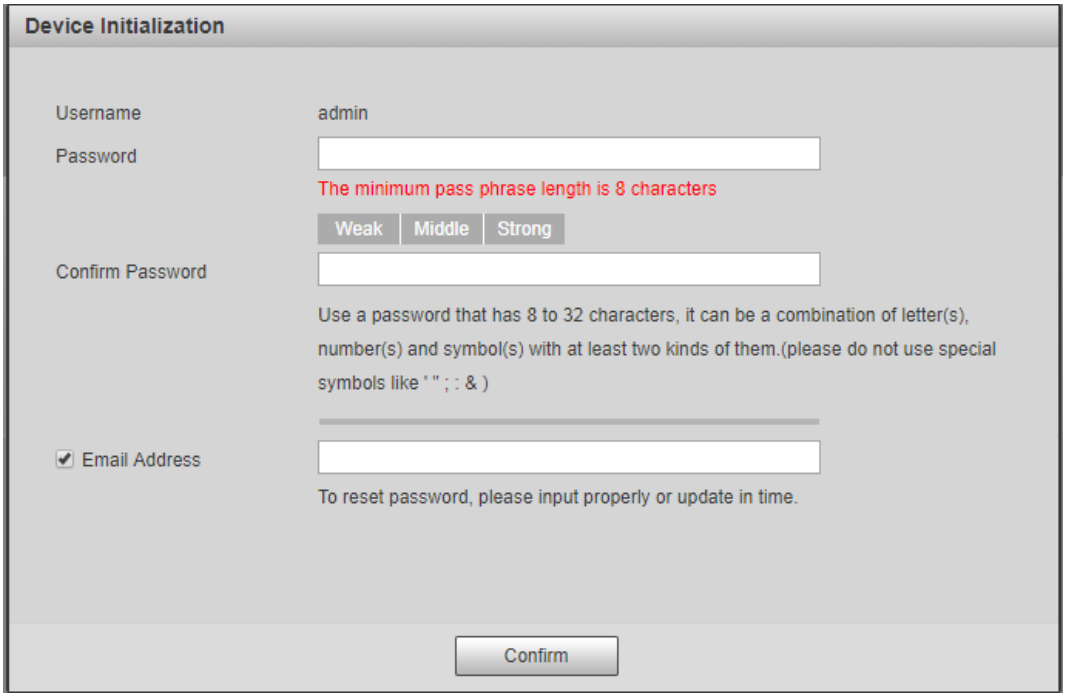

Step 4 Enter and confirm the password.

- The new password must consist of 8 to 32 characters, and contain at least two types from upper case, lower case, number, and special characters (excluding ' " ; :, and &).
- If you want to change your password again, go to **Setting > System > Account > Account**.

Step 5 Select the **Email Address** check box, and then enter your email address (recommended to set for resetting your password).

Step 6 Click **Confirm**.

Step 7 On the **Online Upgrade** interface, click **Confirm**.

Figure 4-2 Config guide

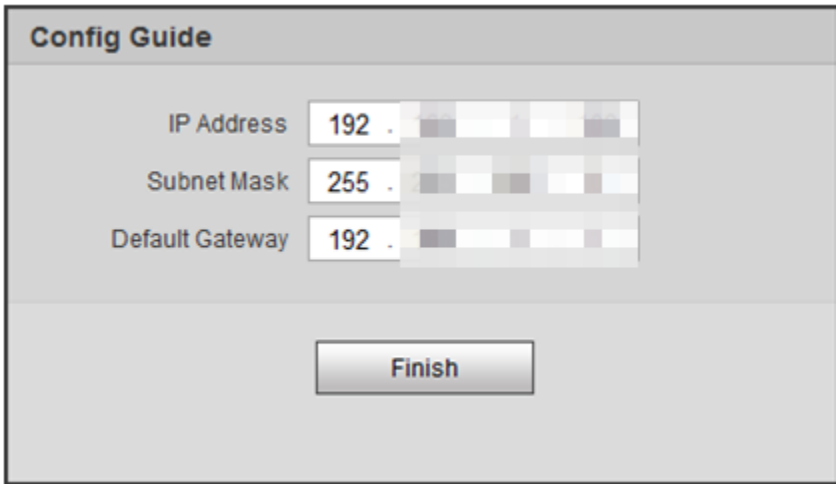

Step 8 Change the default IP address, subnet mask, and default gateway, and then click **Finish**.

Step 9 Enter the username, and password, and then click **Login**.

Figure 4-3 Login

4.1.2 Drawing Rules

On the **Wizard** page, you can configure capture scenarios, and get assistance with setting installation scenarios.

You can click at the upper-right corner of the **Wizard** page to exit.

Step 1 Click the **Wizard** tab.

Step 2 Select the basic date and time format and system time of the camera, and then click **Save**.

- You can manually enter the time, or click **Sync PC** to synchronize time from the server.
- Set **Plate Algorithm** to your region to get better results.

Figure 4-4 Basic parameter

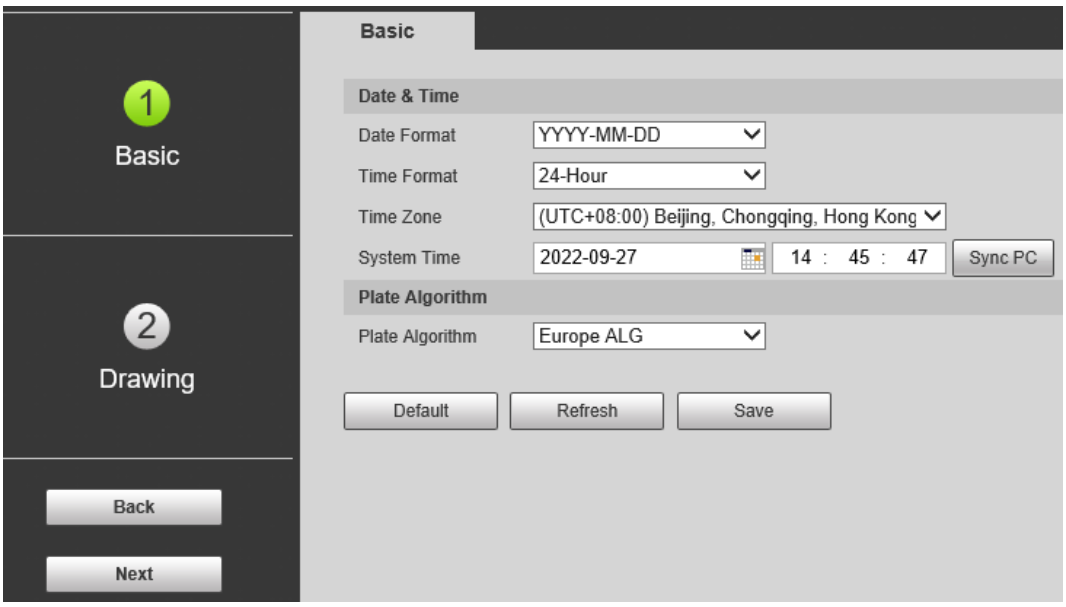

Step 3 Click **Drawing** to see whether the video image is properly zoomed, and focused by checking the plate pixel.

Figure 4-5 Drawing

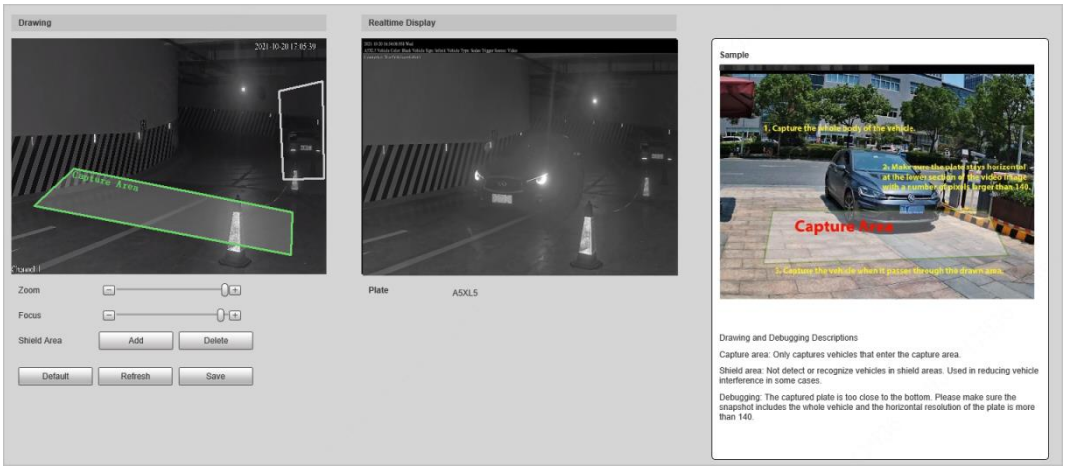

1) Drag zoom, and focus bar to adjust the video image until the image is clear.
2) Follow the tips on the figure on the right side, draw the capture area of entering vehicles.
3) Click **Add** next to **Shield Area** to draw areas where the Camera does not recognize.
   Click **Delete** to delete the area.
4) **Realtime Display** window in the middle displays the plate recognition result cutout at the upper-left corner and vehicle image in real-time.
5) Click **Save**.

Step 4 Click **Finish**, and then click **Finish** in the middle to exit the **Guide** page.

You can always click **Back** to go back to the last step during the guide.

Figure 4-6 A snapshot

4.1.3 Configuring Barrier Control

You can set the barrier control mode, and configure information of opening, and closing barrier.

Usually, the barrier closing signal is output by the radar. If the camera is required to output the signal, you need to configure the corresponding output port on the camera and connect this port with the barrier closing cable.

Step 1 Select **Setting** > **ANPR** > **Barrier Control** > **Barrier Control**.

Figure 4-7 Barrier control

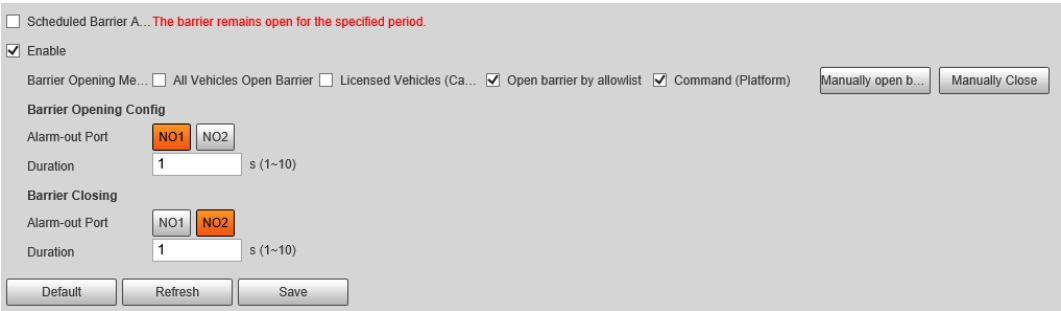

Step 2 Configure parameters.

Table 4-1 Barrier control parameter description

Parameter	Description
Scheduled Barrier Always Open	Select it, and enable the function of barrier always open. Configure the period of barrier always open. The barrier will not close during the defined period.
Enable	Select it to enable barrier control, and configuration.
Barrier Opening Method	Triggers alarm through different modes, and remotely controls the barrier opening and close. ● **All Vehicles Open Barrier**: When the camera captures any vehicle, it outputs an open barrier signal. ● **Licensed Vehicles (Camera)**: When the camera captures any plate, it outputs an open barrier signal. ● **Open barrier by allowlist**: When the camera captures vehicles that are on the allowlist or conform to fuzzy matching, it outputs an open barrier signal. ● **Command (Platform)**: The camera outputs an open barrier signal when it receives a command from the platform. ● Click **Manually open barrier** or **Manually Close** to manually control the barrier. You can set barrier opening control to **Open barrier by allowlist**, and **Command (Platform)** at the same time. **Open barrier by allowlist** takes priority.
Barrier Opening Config	● **Alarm-out Port**: Alarm linkage output port. You can select any one of the 3 ports. ● **Duration**: The duration that the barrier opening or closing signal lasts.
Barrier Closing	

Step 3 Click **Save**.

4.1.3.2 Remote Controller

A remote control of 433MHz or 868 MHz is included upon delivery, which sends signals to the camera to output alarm signals or perform sound and light alarms.

Step 1 Select **Setting** > **ANPR** > **Barrier Control** > **Remote Controller**.

Step 2 Configure **Warning Light** and **Duration**.

If **Warning Light** is selected, when you press and hold , the light on the camera will flash for the duration you configure.

Step 3 Click **Connect**, and then press the corresponding button the remote controller.

You must press the button in 10 seconds.

Step 4 (Option) To disconnect the remote controller, click **Disconnect**.

Step 5 Click **Save**.

Figure 4-8 Remote Controller

4.1.4 Setting RS-485 LED Display

Connect the LED display with the Camera through RS-485, and then you can configure the status, display type, display color, action, speed, and more parameters of the LED.

Step 1 Select **Setting** > **ITC** > **RS-485 LED Display**.

Figure 4-9 RS-485 LED display

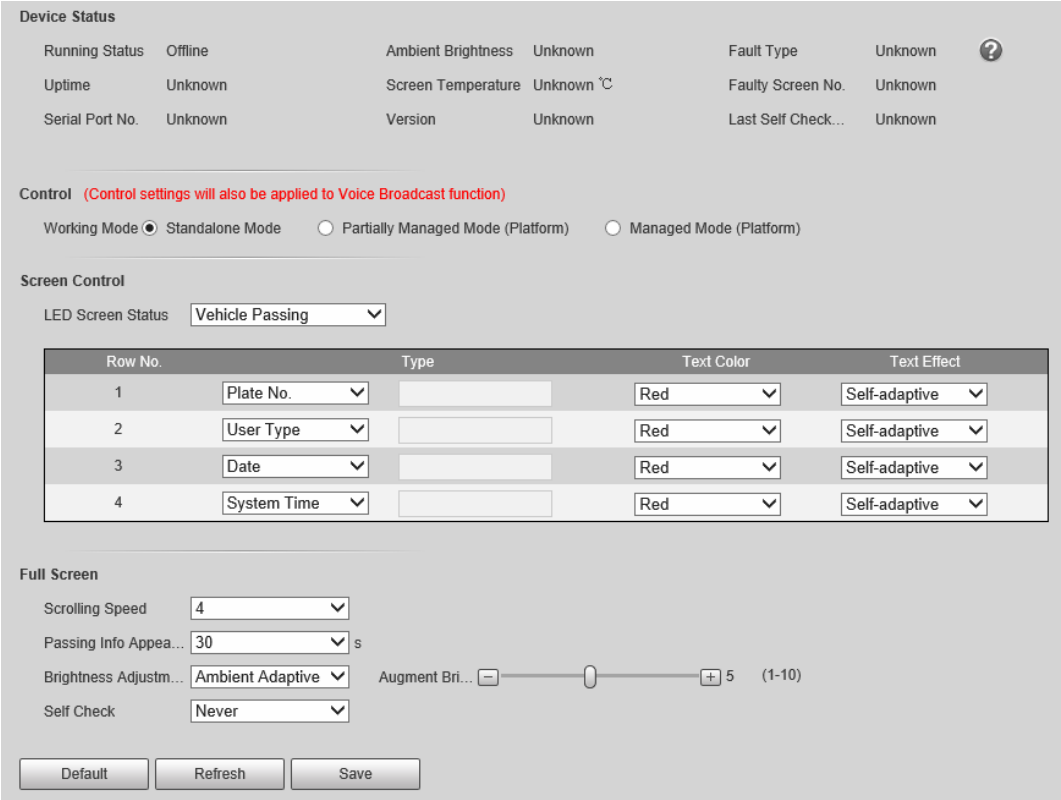

Step 2 Configure parameters.

Table 4-2 LED parameters description

Section	Parameter	Description
Device Status		Displays the status of the screen, such as work state, ambient brightness, screen temperature and more.
Control Settings		Set the work mode for the screen. ● **Standalone Mode**: Display as configured, and not controlled by any platforms. ● **Partially Managed Mode (Platform)**: Select this to allow the platform to control part of the screen information. ● **Managed Mode (Platform)**: Grant the platform complete control over the display information on the screen.
Screen Control		Set the color and action of display information when vehicles pass under normal state. The screen will display information as configured during the period for either status.
Full Screen	Scrolling Speed	The rolling speed of the information on the screen.

Section	Parameter	Description
	Passing Appears On-screen for	The display duration of the passing vehicle information on the screen.
	Brightness Adjustment	• **Ambient Adaptive**: The LED adjusts its brightness according to the ambient brightness. Set the **Augment Brightness**, the higher the value, the bigger the brightness change. • **Manual**: Manually adjust the LED brightness by setting the **Intensity**.
	Self Check	• **Auto**: Set the time interval for the LED to do self-check. • **Never**: The LED does no self-check.

Step 3 Click **Save**.

4.1.5 Configuring Voice Broadcast

You can configure the broadcast content for events, voice broadcast content when vehicles pass, and the volume and video encoding settings for the broadcast.

4.1.5.1 Event Broadcast Settings

Configure the broadcast content when events are triggered.

Step 1 Select **Setting** > **ANPR** > **Voice Broadcast Settings** > **Event Broadcast Settings**.

Step 2 Configure the parameters.

Figure 4-10 Event broadcast

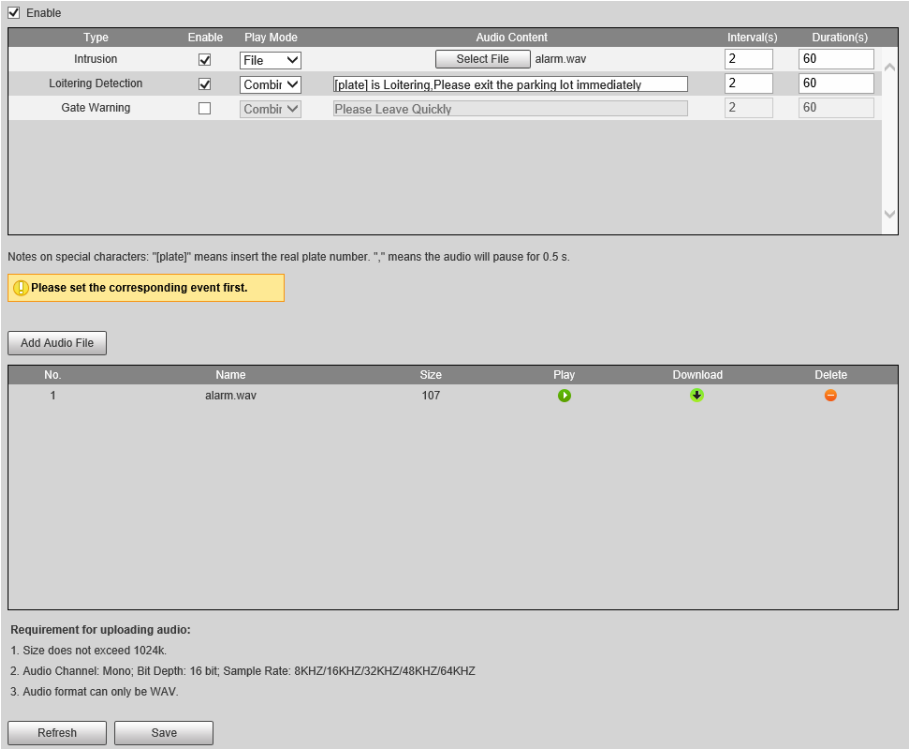

Step 3 Select **Enable** to enable the function.

Step 4 (Optional) Click **Add Audio File,** and then follow the on-screen instructions to upload audio files to be played when events are triggered.

Step 5 Select the checkbox under the **Enable** column to enable an event.

Step 6 Configure other parameters.

- **Play Mode**:
  - **File**: The audio file you selected will be played when the event is triggered.
  - **Combine**: The content in **Audio Content** will be played when the event is triggered.
- **Audio Content**:
  - When the **Play Mode** is set to **File,** select an audio file you uploaded.
  - When the **Play Mode** is set to **Combine,** enter the content to be played when the event is triggered.

    "[plate]" and "," are two special parameters in the content. [plate] will be replaced with the plate number of the vehicle triggered the event, and "," is used to pause for 0.5 s between segments of the content. For example, the content is set to "[plate] is loitering, Please exit the parking lost immediately", and the plate number of the vehicle is AB12345, the broadcast content will be "AB12345 is loitering [puase for 0.5 s] Please exit the parking lot immediately".
- **Intervals(s)** and **Durations(s)**: The audio file or content will be continuously played for the duration and at each interval you configured.

Step 7 Click **Save**.

4.1.5.2 Voice Broadcast Settings

Configure the broadcast content, and the camera will broadcast the content when vehicles pass.

Only certain devices support this function.

Procedure

Step 1 Select **Setting** > **ANPR** > **Voice Broadcast Settings** > **Voice Broadcast Settings**.

Step 2 Enable one or more options.

If the **Barrier Control** is set as **Order (Server)** and the voice broadcast is controlled by the platform, **Parking Fee, Parking Duration, Expires at, Entry Time** and **Exit Time** will be available.

Figure 4-11 Broadcast content

Step 3 Configure parameters.

Table 4-3 Parameters description

Parameter	Description
Insert Forward	Insert an option before the selected one on the display area.
Insert Backward	Insert an option after the selected one on the display area.
Modify	Click next to the broadcast option to edit the prefix and suffix of the option.

Parameter	Description
Delete	Click ✕ next to the broadcast option to delete the option.
Clear	Delete all broadcast options.

Step 4 Click **Save**.

4.1.5.3 Volume/Encoding Settings

Configure the volume for voice broadcast.

Only available for selected models.

Procedure

Step 1 Select **Setting** > **ANPR** > **Voice Broadcast Settings** > **Volume/Encoding Settings**.

Step 2 Configure the parameters.

Figure 4-12 Volume/Encoding

Table 4-4 Parameter description

Parameter	Description
Input Volume	The volume of the sound received by the camera.
Audio Output Type	Where the voice broadcast will be produced. ● **Camera Audio Output**: The voice broadcast will be played by the device connected to the audio output port of the camera. ● **Camera Speaker**: The voice broadcast will be played by the speaker of the camera.
Output Volume	The volume of the voice broadcast.
Voice Speed	The speed for the voice broadcast.

Step 3 Click **Save**.

4.1.6 Wiegand

The camera is built with a wiegand module, which can be straightly connected to access control devices through Wiegand 26 bit protocol. No operation on the camera webpage is needed.

4.1.7 IVS

The camera supports detecting targets that are loitering or enter an off-limit area. You can configure up to 4 rules.

Procedure

Step 1 Select **Setting** > **Event** > **IVS**.

There is one rule by default.

Step 2 Click **Draw Rule**, draw an area on the video image, right-click to complete drawing.

Step 3 (Optional) Use the target filter function to only detect targets with a certain size.

1) Select **Max Size** > **Draw Target**, and then click and hold on the video image to draw an area.

   You can drag any of its corners to adjust it.

2) Click **Min Size**, and then click and hold on the video image to draw an area.

   You can also drag any of its corners to adjust it.

   Only targets smaller than the maximum size, but bigger than the minimum size will be detected.

Step 4 Configure other parameters.

Table 4-5 Parameter description

Parameter	Description
Arm and Disarm Period Mode	Configure when targets will be detected and trigger alarms. For details, see "2.5.1.9 Setting Time Schedule".
Target	Select the types of targets to trigger alarms.
Interval	The interval between each alarm to be triggered. For example, if you set it to 200 s, with each alarm triggered, another alarm can only be triggered after 200 s.
Duration	An alarm can only be triggered if a target is detected for as long as the defined duration. For example, if you set it to 3 s, a loitering alarm will only be triggered after a car has been loitering for 3 s or more.
Warning Light	If selected, the illuminator on the camera will flash for the duration you defined when an alarm is triggered.
Duration	
Send Email	The camera sends an email to the defined email address when an alarm is triggered. To set the email address, go to **Setting** > **Network Settings** > **Email**.
Linkage Snapshot	If selected, the camera will take a snapshot when an alarm is triggered.

Step 5 Click ⊕ to add more rules, and then repeat the previous steps to configure them.

You can configure up to 4 rules.

Step 6 Click **Save**.

4.2 Configuring Remote Control of Barrier Gate

4.2.1 Configuring Remote Control of DHI-IPMECD-203X Barrier Gate

Paring codes for remote control:

Step 1 On the motherboard, press and hold **SET** and then press **+** to enter the programming mode.

Step 2 When F1 is displayed on the nixie tube of the motherboard, press and hold the **SET** for 6 s, and then the advanced menu Co is displayed. Press **SET** several times until the C7 is displayed on the nixie tube.

Step 3 Press **+** to enter C7 parameter configuration page, and the stored number of remote control codes is displayed on the nixie tube.

Step 4 Press + to start the remote control learning. Press and hold on the matching remote control until the indicator of barrier gate board flashes, and the number increases by 1, indicating that the remote control learning is successful.

Step 5 If other remote controls need to pair codes, repeat step 4.

Step 6 After the remote control learning is completed, exit the learning mode on the motherboard. Press **SET** to return to the function status C7, and then press and hold **SET** and the press **–** to exit the programming mode.

Clearing codes for remote control:

Step 1 On step 3, the nixie tube displays the number of remote control codes that have been stored. Press – three times to clear all the learned remote controls of the barrier gate.

Figure 4-13 Motherboard of DHI-IPMECD-203X barrier gate

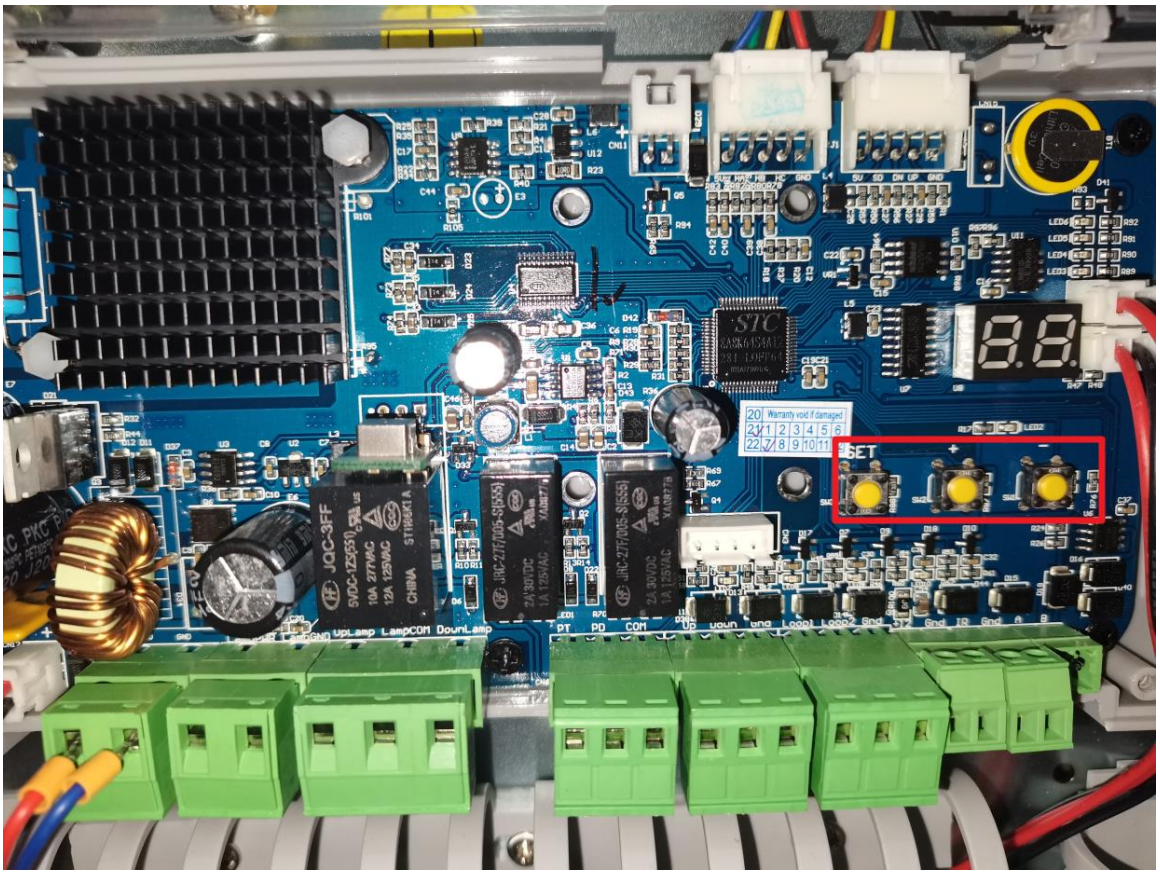

Figure 4-14 Remote control

4.2.2 Configuring Remote Control of DHI-IPMECD-302X Barrier Gate

Figure 4-15 Receiver

- Match the remote information
  - Successful matching: Press and hold the learning button on the receiver for 2 s, press the remote handle at least twice and then you can press keys on the remote to control the arm.
  - Failed matching: The remote handle is not pressed a while after pressing the learning button on the receiver, and the receiver indicator does not flash 3 times immediately, but flashes 7 times after about 8 seconds.
- Clear the remote information: Press and hold the learning button on the receiver for more than 3 seconds, and then the remote cannot control the arm. This means the matching information has been cleared.

4.3 Checking System Functions

Item	Functions	Contents
Camera	Capture	After the vehicle passes through the capture line, check whether there are snapshots and recognition results generated on the webpage. If there are, it means that the capture function is normal.
	Barrier opening control	Check the physical circuit of the camera and the barrier opening parameters for camera allowlist.

		You can enable **Manually Open** of the camera, through which you can test the physical wiring of the opening signal between the camera and the barrier gate. If the barrier is opened as scheduled after pressing the button, it means that the wiring is correct. For the barrier opening of allowlist, firstly check the physical wiring. If the wiring is correct, check the configuration of the allowlist data: Whether the license plate is added and whether the barrier opening permission is configured and valid. The above parameters are configured on the allowlist data page of the camera.
Barrier gate	Barrier opening control	You can check the function when testing the camera wiring.
	Auto closing	After the vehicle passes through the radar monitoring area, the barrier closes. Therefore, after the barrier gate is opened, the vehicle can pass through the anti-smashing radar to check whether the gate is closed as scheduled. The key point of the barrier gate is the monitoring of anti-hit radar, so the simulation should observe the operations of anti-smashing radar in real time. If the radar can be monitored and released in real time when the vehicle is in and out, it means that the radar works normally.
	Remote control	The remote control has been matched with the barrier gate, and the barrier gate can be opened/closed by remote control. When there is an error, re-learn the remote control by referring to the user's manual of barrier gate.

5 FAQ

1. Problems related to light blue license plates.

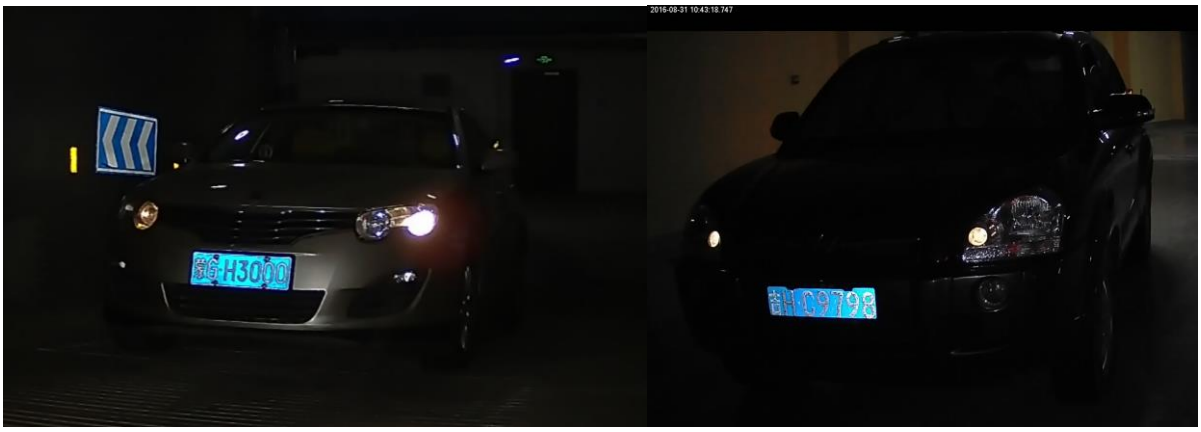

Due to the differences in the materials of license plates, the light blue license plate will have serious exposure and discoloration of characters under direct light at night. It is necessary to install an external illuminator within 0.6 meters above the ground and turn off the built-in illuminator to solve the problems.

2. When I log in to the camera web for the first time, the controls cannot be downloaded.

We recommend you use IE browser. Open IE browser, select ⚙ **> Internet options > Security > Custom level...**, enable all ActiveX controls and plug-ins, save the configuration, and then close the broswer. Reopen the browser, and then log in to the device webpage.

Download and install the controls successfully.

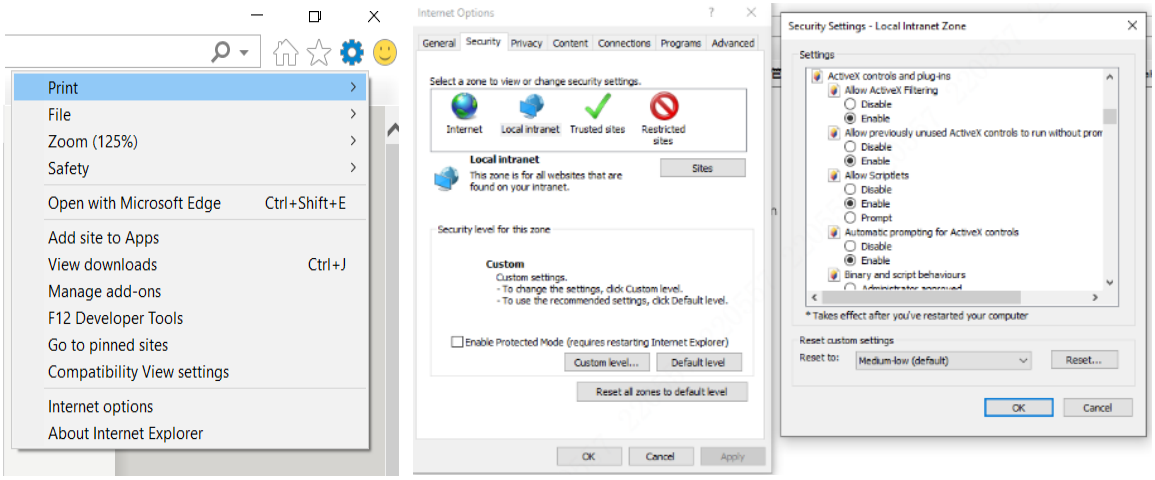

3. Common problems and solutions are displayed in the following table:

Device	Problems	Solutions
Camera	The camera cannot start normally.	● Use a multimeter to measure whether the power adapter works normally. ● If the power supply is normal, press and hold **Reset** button for 5 s to restore the camera to default settings. The initialized IP address is 192.168.1.108.

Device	Problems	Solutions
	The camera restarts abnormally or crashes.	● The input voltage does not meet the requirements or is unstable. ● Hardware of the camera is abnormal. ● If it is caused by an abnormal upgrade, press and hold **Reset** for 5 s to reset it. If the problem is serious, return the camera to factory for repair.
	Network connection is unstable.	● Check the network cable is connected correctly. ● Check whether there is IP conflict. ● Mac address conflict. ● The camera restarts repeatedly.
	Failed to log in to the device on IE browser.	● Check whether the device starts normally and whether the network connection is normal. ● The browser security level is very high, preventing the download of webpage controls ● If the local computer controls conflict with the camera space, delete the controls and download them again. ● Incorrect username and password. ● If the camera programs do not start normally, press and hold **Reset** for 5 s to reset the camera. ● If hardware is abnormal, return the product to factory for repair.
	Distorted image colors and brightness, and blurry videos	● If the camera parameters are incorrect, restore the camera to default settings. ● If the camera stream is inappropriate, improve the stream. ● If the image sensor is abnormal, return the camera to factory for repair.
	Incorrect time	● Synchronize the camera time with your computer. ● If hardware is abnormal, return the camera to factory for repair.
	Dahua recordings cannot be played on computers.	Log in to Dahua official website to download Dahua player. Upgrade the player.
	No snapshot for a passing vehicle	● On the live view page, check whether Receive Images is selected.
	The camera does not recognize vehicles or recognition rate is low.	● Check the definition of the camera. ● Check the pixels of the license plate, which is required to be 140–160. ● Check the illumination to see whether the license plate is overexposed. ● Check scenario configurations to see whether the license plate is within the zone line and lane line.
	The barrier gate does not open when recognizing vehicles in the allowlist.	● Check whether **Allowlist Open** is selected for camera-barrier gate linkage. ● Check whether **Allowlist** is enabled. ● Check whether the allowlist data is imported, and whether the opening permission, and camera date is synchronized with the computer.

Device	Problems	Solutions
		● Check whether the wiring is correct. ● Check whether the license plate in allowlist is correct.
Barrier gate	Controller does not work.	● Check the power supply. ● Check the cables of strong and weak current. ● Check the fuse switch. ● Change the capacitor. ● Check whether the motor is not loaded. ● Check the thermal protection and restart it after 20 min.
	The barrier arm does not stops at the correct position.	● If the running time of the barrier arm is not enough, extend the running time. ● Adjust the position of the limit spring. ● Check the reed switch and magnet.
	The barrier gate can be opened (closed), but cannot be closed (opened).	● Adjust the position of the reed switch. ● Change the reed switch. ● Check the wiring. ● Adjust the position of the magnet. ● Check whether the radar, induction loop and IR sensor always have signals.
	The remote control does not work.	● The remote control is damaged. ● The remote control has no battery. ● The distance is beyond the range of the remote control. It is required to be used within 30 m without obstacles. ● Wired radio interference.
	Manually open the barrier gate, but it is closed.	Incorrect wiring.
	Auto closing failed.	● Check the signal of the induction loop. ● DIP1 is incorrect.
Others	Refer to corresponding software guide.	

ENABLING A SAFER SOCIETY AND SMARTER LIVING

ZHEJIANG DAHUA VISION TECHNOLOGY CO., LTD.
Address: No. 1399, Binxing Road, Binjiang District, Hangzhou, P. R. China | Website: www.dahuasecurity.com | Postcode: 310053
Email: dhoverseas@dhvisiontech.com | Tel: +86-571-87688888 28933188