DH-PFB1211W

Plastic Wall Mount Bracket

- Built of PC material that has a V2 flame-retardant grade and is cost-effective.
- Supports multiple camera installation methods, such as wall mount, pole mount, corner mount, and ceiling mount.
- Easy to install and use.

Series Overview

The Mounting Bracket works with front-end services, supporting installation methods such as wall mount, pole mount, corner mount and in-ceiling mount. Select brackets are designed to suit complex scenes, making them convenient to use in environments with high temperatures, humidity, frequent vibrations, and in locations that are highly corrosive. These highly reliable brackets are easy to install and use.

Scene

Ideal for mounting cameras, and works in temperatures ranging from –40 °C to +60 °C (–40 °F to +140 °F) and in environments with a relative humidity of less than 90%.

Technical Specification

Structure

Casing Material	PC + 10%GF
Product Dimensions	122.9 mm × 82.4 mm × 68.3 mm (4.84" × 3.24" × 2.69") (L × W × H)
Appearance Color	White
Net Weight	0.065 kg (0.14 lb)
Gross Weight	0.075 kg (0.17 lb)
Load Bearing	0.7 kg (1.54 lb)
Installation	Wall mount
Applicable Model	Please see Camera Accessories Selection

Environment

Operating Temperature	–40 °C to +60 °C (–40 °F to +140 °F)
Operating Humidity	<90% (RH)
Storage Temperature	–40 °C to +60 °C (–40 °F to +140 °F)
Storage Humidity	10%–90% (RH)
Anti-corrosion Level	Basic Protection *The products are designed for general use and are applicable even in areas with no specific requirements for anti-corrosion protection.

Ordering Information

Type	Model	Description
Camera Mount	DH-PFB1211W	Plastic Wall Mount Bracket

Installation

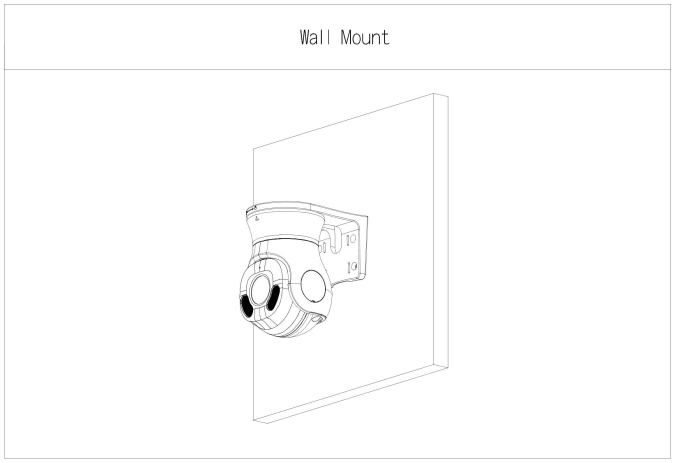

Dimensions (mm[inch])

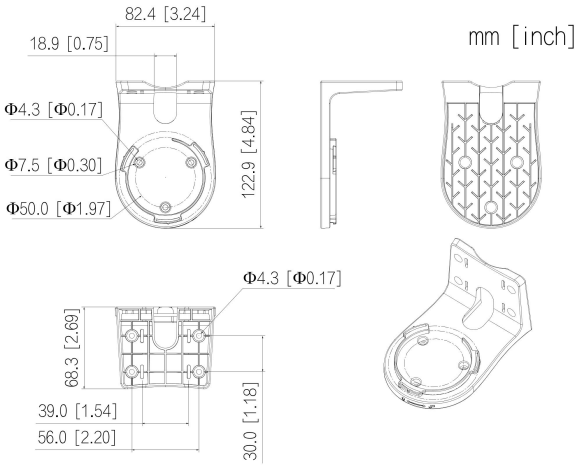

Package Information

- Mounting bracket × 1
- ST4 × 25 screw × 4
- Plastic expansion tube × 4
- Positioning map × 1

©Dahua. All rights reserved. Design and specifications are subject to change without notice.
Pictures in the document are for reference only, and the actual product shall prevail.