DH-PFA3331S

Water-proof Junction Box

- Built of aluminum alloy.
- IP66 junction box.
- Contains cable outlets on its bottom and sides to make wiring more convenient.
- Matched with particular cameras, beautifully and elegantly designed.

Operating Temperature	–40 °C to +60 °C (–40 °F to +140 °F)
Operating Humidity	<90% (RH)
Storage Temperature	–40 °C to +60 °C (–40 °F to +140 °F)
Storage Humidity	10%–90% (RH)
Anti-corrosion Level	Basic Protection *The products are designed for general use and are applicable even in areas with no specific requirements for anti-corrosion protection.

Series Overview

The Junction Box is beautifully designed and highly convenient. Cables can be organized in it and there are outlets at the bottom and side of the box, making it easy to install and use.

Scene

Ideal for mounting cameras, and works in temperatures ranging from –40 °C to +60 °C (–40 °F to +140 °F) and in environments with a relative humidity of less than 90%.

Technical Specification

Structure

Casing Material	Aluminum alloy
Product Dimensions	134.4 mm × 134 mm × 52.0 mm (5.29" × 5.28" × 2.05") (L ×W × H)
Appearance Color	White
Net Weight	0.53 kg (1.17 lb)
Gross Weight	0.63 kg (1.39 lb)
Load Bearing	3.0 kg (6.61 lb)
Installation	Junction mount
Screw Thread Type	G3/4
Applicable Model	Please see Camera Accessories Selection
Packaging Dimensions	146.0 mm × 147.0 mm × 65.0 mm (5.75" × 5.79" × 2.56") (L × W × H)

Environment

Protection	IP66

Ordering Information

Type	Model	Description
Camera Mount	DH-PFA3331S	Water-proof Junction Box

Installation

Wall Mount

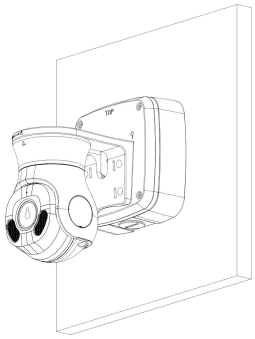

Dimensions (mm[inch])

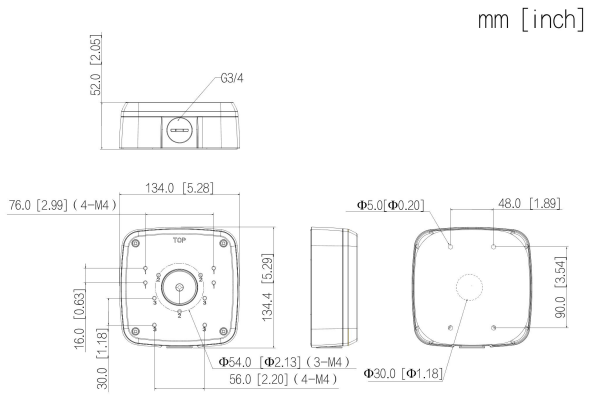

©Dahua. All rights reserved. Design and specifications are subject to change without notice.
Pictures in the document are for reference only, and the actual product shall prevail.