DH-PFA2310R

Junction Box

· Built of aluminum alloy.
· Suitable for a variety of cameras.
· Elegant and easy to install.

System Overview

Dahua Junction Box is beautifully designed and highly convenient. Cables can be organized in it and there are outlets at the bottom and side of the box, making it easy to install and use.

Scene

Ideal for mounting cameras, and works in temperatures ranging from –40 °C to +60 °C (–40 °F to +140 °F) and in environments with a relative humidity of less than 90%.

Technical Specification

Structure	
Casing Material	Aluminum alloy
Product Dimensions	Φ111.2 mm × 41.2 mm (Φ4.38" × 1.62")
Appearance Color	White
Net Weight	0.26 kg (0.57 lb)
Gross Weight	0.44 kg (0.97 lb)
Load Bearing	3 kg (6.61 lb)
Installation	Junction Mount
Screw Thread Type	G3/4
Applicable Model	Please see "Camera Accessories Selection"
Packaging Dimensions	187.0 mm × 164.0 mm × 72.0 mm (7.36" × 6.46" × 2.83") (L × W × H)
Environment	
Operating Temperature	–40 °C to +60 °C (–40 °F to +140 °F)
Operating Humidity	<90% (RH)
Storage Temperature	–40 °C to +60 °C (–40 °F to +140 °F)
Storage Humidity	10%–90% (RH)
Anti-corrosion Level	Basic Protection

Ordering Information

Type	Model	Description
Camera Mount	DH-PFA2310R	Junction Box
	PFA2310R	Junction Box

Installation

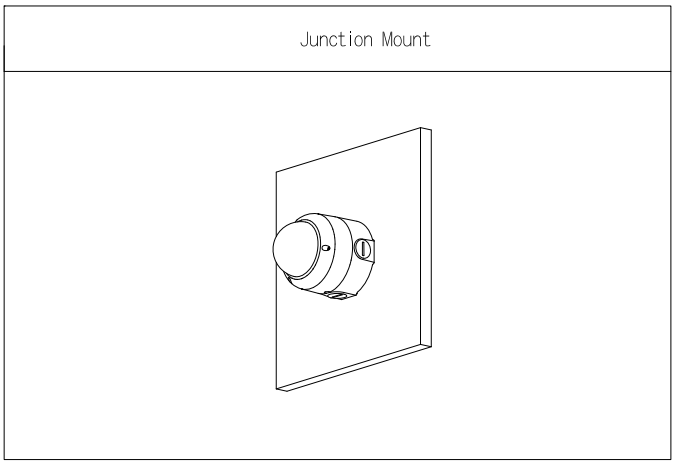

Dimensions (mm[inch])

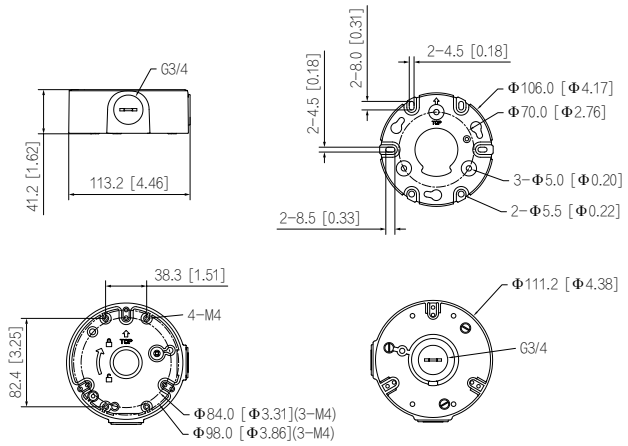

Package Information

- Junction box × 1
- M4x10 screw × 4
- ST4×25 screws × 3
- Plastic expansion bolt × 3
- S3.0 Wrench × 1
- Water joint × 1
- Mounting Sticker × 1
- Mounting Plate × 1

Rev 002.000 © 2023 Dahua. All rights reserved. Design and specifications are subject to change without notice.
The images, specifications and information mentioned in the document are only for reference, and might differ from the actual product.