DHI-ITC831-KW4F-G

Dahua 8MP All-in-One Enforcement Camera

- 1/1.8" 8 MP starlight CMOS sensor.
- Maximum resolution: 3840 × 2160@30 fps.
- Video compression standards: H.265, H.264M, H.264H and MJPEG.
- With its advanced image technology, it can work in ultra-low lighting conditions and complete darkness.
- Protection: IP68, IK10 rated.
- Supports 4G.
- Built in millimeter-wave speed radar.
- The embedded dual-LED lights offer warm light and 850 nm IR light options that can be conveniently switched between.
- Built-in vari-focal lens that allows the device to seamlessly adapt to multiple scenes.

Series Overview

With its high-performance AI processor, the Spotter Nano camera delivers high-quality images even in the toughest weather conditions. It utilizes Dual Light technology and its built-in LED illuminators to supplement light, enabling you to freely switch between its warm light and IR light options. The tilted window design and glass heating capability together enable rapid image capture and fast data transmission for crisp and clear visuals. Additionally, the camera also leverages DCG technology to deliver high-quality images even in challenging lighting conditions. With its embedded radar, it utilizes radar and video fusion technology to accurately measure vehicle speed and gather data from a wide range of perspectives. Its 4G card facilitates seamless network transmission, eliminating the need for cumbersome network cables. Built for durability, the camera has an IP68 and IK10 rating, making it ideal for outdoor use.

Functions

Wireless 4G
With its built-in 4G mobile network module, you can register devices to the platform wirelessly when a 4G card is inserted into the card slot. Data on violations, ANPR and more can also be sent to the platform through the wireless network.

Multi-dimensional Perception
By integrating the camera with the high-precision millimeter wave radar, the device uses deep learning technology to manipulate high-frequency bands, and collect and integrate different types of data such as data from structures and scenes. This makes it suitable for a wide variety of locations.

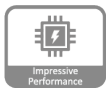

Impressive Performance
The high-performance CPU processor extracts and analyzes information on motor and non-motor vehicles in real time, providing valuable information on their features. This information is useful for effective decision making.

Intelligent Defogging
Suitable for use in all weather conditions, the camera can automatically control the ITO glass to defog based on the temperature and humidity inside the cover, effectively preventing the glass from icing and fogging.

Protection
IP68: The camera passes a series of strict test on dust and soak. With the water-proof enclosure, the camera can work normally after soaking in 1 m deep water for 2 hours.

Scene

Dahua's new generation of urban road surveillance cameras can be widely used in urban roads, rural streets, parks, and residential scenarios, which significantly improves the efficiency of urban safety management and makes roads safer, smoother, and smarter.

Technical Specification

Camera

Image Sensor	1/1.8" CMOS
Pixel	8MP
Shutter Mode	Single shutter
Electronic Shutter Speed	Auto/Manual 1/50 s–1/100,000 s
Noise Reduction	3D NR
S/N Ratio	> 56 dB
WDR	140 dB
Min. Illumination	0.0001 lux

Illuminator

Illuminator Number	3 illuminators (850 nm LED illuminator or 3500 K LED illuminator)
Illuminator Brightness Adjustment	brightness adjustable
Illumination Distance	23 m–30 m (75.46 ft–98.43 ft) (adjustable brightness)
Lane Coverage	1–3 lanes

Lens

Lens	Included
Lens Type	Motorized vari-focal
Focal Length	8 mm–32 mm
Max. Aperture	Max. F1.6
Field of View	H: 42°–15°; V: 22.8°–8.4°; D: 48.7°–17.1°
Exposure Mode	Auto; Manual (Select from shutter values or customize shutter range)

Radar

Radar Frequency Range	61 GHz–62 GHz
Speed Measurement Accuracy	Analog speed measurement error: -2 km/h to +2 km/h (-6,561.68 ft/h to 6,561.68 ft/h) On-site speed measurement error: Vehicle speed <100 km/h (<328,083.99 ft/h): –2 km/h to +2 km/h (–6,561.68 ft/h to 6,561.68 ft/h) Vehicle speed ≥100 km/h (≥328,083.99 ft/h): ± 2%
Speed Detection Range	5 km/h–180 km/h
Target Detection with Radar	Up to 32
Detection Distance & Angle	≤120m@0° ≤30m@±30°

Function

Trigger Mode	Video trigger/Radar trigger
OSD Overlay	Time, address, device SN, lane No., plate number, plate color, vehicle logo, vehicle type, vehicle color, vehicle size, vehicle speed, country/region, event (violation name), and motorcycle attributes (type, number of people, and helmet)
Alarm Event	Storage full; storage error; external alarm; no storage card; license plate blocklist; illegal access; network disconnection; IP conflict; intrusion; unlicensed vehicle
Automatic Network Replenishment (ANR)	Platform and FTP (TF card is required)
Auto Registration	Yes

Intelligence

Target Detection	Motor vehicle; motorcycle
ANPR	Adopts deep-learning algorithms to recognize license plate numbers and letters
Vehicle Type Recognition	Vehicle head: SUV, Large bus, sedan, light truck, pickup, heavy truck, medium truck, van, medium bus, MPV Vehicle tail: SUV, large bus, sedan, light truck, pickup, heavy truck, medium truck, van
Vehicle Color Recognition	White, pink, black, red, yellow, gray, blue, green, dark orange, purple, brown, and silver gray
Vehicle Brand/Logo Recognition	Acura; Alfaromeo; Ashokleyland; Astonmartin; Audi; Baic; Bently; Benz; BMW; Buick; BYD; Cadillac; Chery; Chevrolet; Chrysler; Citroen; Dacia; Daihatsu; Datsun; Dodge; DS; Ferrari; Fiat; Force; Ford; Foton; Geely; GMC; Greatwall; Hino; Honda; Hyundai; Infiniti; Isuzu; Iveco; Jac; Jaguar; Jeep; Kia; Kinglong; Land; Lexus; Lifan; Lincoln; Mahindra; MAN; Maserati; Mazda; Mercury; MG; Mini; Mitsubishi; Nissan; Opel; Peugeot; Porsche; Renault; Rollsroyce; Saab; Scania; Seat; Skoda; Smart; Subaru; Suzuki; Tata; Tesla; Toyota; UD; Volkswagen; Volvo
Motor Vehicle Violation Capture	Speeding; driving slow; wrong-way driving; illegal lane change
Motorcycle Violation Capture	Captures traffic violations including carrying passenger, not wearing helmet, and wrong-way driving
Traffic Flow Detection	Supports data classification and generating statistics on lanes, vehicle type, speed, and the date. The results can be exported to the CSV file format.
Traffic Event	Motor vehicle illegal stopping on the roadway; traffic congestion
Capture Speed	Up to 180 km/h
Traffic Monitoring Lane	4lanes

Video

Video Compression	H.265;H.264M;H.264H;MJPEG
Video Resolution	8MP (3840× 2160); 1080p (1920 × 1080); 720p (1280 × 720);
Video Frame Rate	50 Hz: Max. 25fps; default main stream(3840 × 2160@25 fps) , sub stream(1280 × 720@25 fps) 60 Hz: Max. 30fps; default main stream(3840 × 2160@30 fps) , sub stream(1280 × 720@30 fps)
Video Bit Rate	H.264: 32 kbps–32768 kbps H.265: 32 kbps–32768 kbps MJPEG: 512 kbps–32768 kbps
Bit Rate Control	VBR;CBR
White Balance	Auto;Manual;Outdoor;Natural;Street Lamp;Partial white balance
Edge Enhancement	Yes
HLC	Yes

BLC	Yes
Bad Pixel Correction	Yes
Gain Range	0-100

Image

Composite Image	Supports combining up to 3 source images, and 1 closeup image into a composite image
Image Resolution	3840 (H) × 2160 (V) (OSD black background is not calculated in the pixels)
Image Encoding Format	JPEG
Image Tampering Prevention	Verifies watermarks in videos and images

Network

Network Port	1 × RJ-45 Ethernet port
SDK and API	Yes
Security Mode	Authorized username and password, MAC address binding, HTTPS encryption, and network access control
Network Protocol	HTTP;HTTPS;IPv4;RTSP;UDP;NTP;DHCP;DNS;IPv6;802.1x ;FTP;UPnP;ARP;RTCP;RTP;TCP;IP
Interoperability	ONVIF (Profile S & Profile G & Profile T & Profile M)
Browser	Microsoft Edge Chrome: Chrome 41 and earlier Firefox: Firefox 49 and earlier For Win 10 users, run the browser as administrator
Timing	NTP
4G Type	GSM/WCDMA/LTE
4G Frequency Range	NL668-EAU: LTE FDD: Band 1/3/7/8/20/28 LTE TDD: Band 38/40 WCDMA: Band 1/8 GSM: 900/1800 MHz NL668-LA: LTE FDD: Band 1/2/3/4/5/7/8/28/66 LTE TDD: Band 38/40 WCDMA: Band 1/2/3/4/5/8 GSM: 850/900/1800 MHz
4G Power Transmission	NL668-EAU: LTE: Power class3: 23 dBm±2 dB WCDMA: Power class3: 24 dBm+1/-3 dB GSM: Power class0: 30 dBm±2 dB (GSM1800); Power class5: 33 dBm±2 dB (GSM900) NL668-LA: LTE: Power class3: 23 dBm± 2dB WCDMA: Power class3: 24 dBm+1/-3 dB GSM: Power class0: 30 dBm±2dB（GSM1800); Power class5: 33 dBm±2dB (GSM850/900)

Port

Storage	1, supports maximum 1 TB TF card local storage
RS-485	1
RS-232	1
Alarm Input	1 channel
Alarm Output	2 channels

General

Power Supply	12 VDC;PoE
Power Consumption	With light turned off < 11 W With IR light turned on < 14 W With warm light turned on < 20 W
Operating Temperature	–30 °C to +65 °C (–22 °F to +149 °F)
Storage Temperature	–30 °C to +65 °C (–22 °F to +149 °F)
Operating Humidity	10%–90% (RH), non-condensing
Storage Humidity	0%–90% (RH), non-condensing
Protection	IK10;IP68
Anti-corrosion Level	Basic Protection *The products are designed for general use and are applicable even in areas with no specific requirements for anti-corrosion protection.
Certifications	CE EMC:EN 61000-3-3;EN IEC 61000-3-2;EN 301 489-1;EN 301 489-51;EN 301 489-52;EN 301 511;EN 301 908-1;EN 301 908-2;EN 301 908-13;EN 305 550-2;EN IEC 62311 CE LVD:EN62368-1 CE RED:EN 61000-3-3;EN IEC 61000-3-2;EN 301 489-1;EN 301 489-51;EN 301 489-52;EN 301 511;EN 301 908-1;EN 301 908-2;EN 301 908-13;EN 305 550-2;EN IEC 62311 IK10:IEC60068-2-75:2014 IP68：IEC60529:2013
Product Dimensions	350 mm × 109 mm × 150 mm (13.78" × 4.29" × 5.91") (L × W × H)
Packaging Dimensions	400 mm × 197 mm × 171 mm (15.75" × 7.76" × 6.73") (L × W × H)
Net Weight	1.9 kg (4.19 lb)
Gross Weight	2.54 kg (5.60 lb)
Installation	Installs with universal mounting brackets, or as a side-mount with mounting brackets

Ordering Information

Type	Model	Description
Spotter Nano	DHI-ITC831-KW4F-G	Dahua 8MP All-in-One Enforcement Camera
Accessories (Optional)	DH-PFA5510	Quick-install Pole Mount Braket

Accessories

Optional:

DH-PFA5510
Quick-install Pole Mount Braket

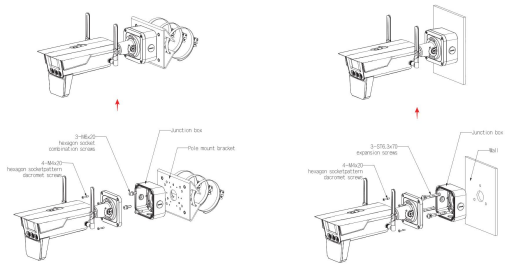

Dimensions (mm[inch])

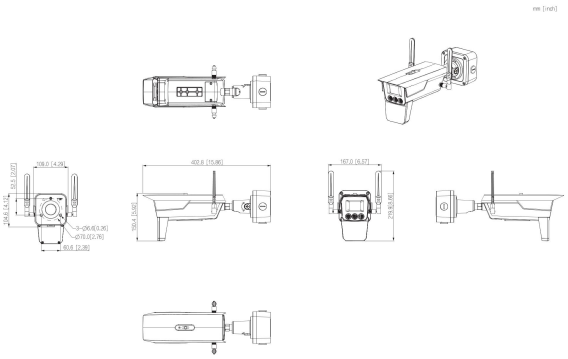

Rev 002.000 ©Dahua. All rights reserved. Design and specifications are subject to change without notice.
Pictures in the document are for reference only, and the actual product shall prevail.