DH-IPC-UFW4859T1-AS-PV

8MP Smart Dual Light Active Deterrence Fixed-focal Bullet WizSense + Network Camera

Launched by Dahua Technology, WizSense + is a series of AI products and solutions that adopt independent AI chip and deep learning algorithm. It focuses on human and vehicle with high accuracy, enabling users to fast act on defined targets. Based on Dahua's advanced technologies, WizSense + provides intelligent, simple and inclusive products and solutions.

Series Overview

Dahua WizSense + 4 Series Network Camera greatly saves on bandwidth and storage space through its AI Coding technology. Driven by its
advanced deep learning algorithms, the camera supports intelligent functions such as perimeter protection, smart motion detection (SMD), Acupick, and AI SSA (AI Scene Self-adaptation), making it easy and convenient to use. Starlight technology and its large aperture lens also allow the camera to produce clear, vivid images even in poor lighting

Functions

Siren and Light Active Deterrence

Dahua siren and light active deterrence network camera supports the light alarm and voice alarm when perimeter event occurs, to realize the deterrence and effective intervention. The camera is built in multiple voices for selection, and supports customized voice importing.

SMD 4.0

Dahua Smart Motion Detection technology works with intelligent algorithms to classify targets that trigger motion detection alarms. It filters out objects that are not targets, such as small and large animals, to avoid triggering false alarms. With an AI NVR, Quick Pick technology becomes available, allowing you to easily search for and pick out human and vehicle targets from SMD event videos, prioritizing the highest matches.

Smart Dual Light

Dahua Smart Dual Light technology adopts smart algorithm to detect targets. Usually, the IR illuminator is on at night; when the target appears in the monitoring area, the white light is on, and the camera records the full-color video and information of key events. That is, the camera links snapshot and video with full-color image. When the target is out of the monitoring area, the white light is off and the IR illuminator is on, which reduces light pollution efficiently.

One-tap Disarming

Dahua One-tap Disarming function, which is convenient and easy for operation, is the switch for event linkage. Customers can close and recover event linkage through mobile App, which meets multi-scenarios needs.

**** The parameters and datasheets below can only be applied to 4859-PV-S5 series.***

- 8-MP 1/2.7" CMOS image sensor, low luminance, and high definition image.
- Outputs max. 8 MP (3840 ×2160)@25/30 fps.
- H.265 codec, high compression rate, ultra-low bit rate.
- Built-in warm light and IR LED; the max. IR illumination distance is 30 m and warm light distance is 30 m.
- ROI, SMART H.264+/H.265+, AI H.264/H.265, flexible coding, applicable to various bandwidth and storage environments.
- Rotation mode, WDR, 3D NR, HLC, BLC, digital watermarking, applicable to various monitoring scenes.
- Intelligent monitoring: Intrusion, tripwire (the two function support the classification and accurate detection of vehicle and human)
- Abnormality detection: Motion detection, privacy masking, scene changing, audio detection, no SD card, SD card full, SD card error, network disconnection, IP conflict, illegal access, and voltage detection.
- Alarm: 1 in, 1 out; audio: 1 in, 1 out; supports max. 256 G Micro SD card; built-in dual MICs; 1-ch speaker; support two-way talk.
- 12 VDC/PoE power supply.
- IP67 protection.
- Sound and light alarm (red and blue lights).
- SMD 4.0.
- Supports AI SSA and one-tap arming and disarming.
- SMD area can be set in warm light areas that support triggering alarms.

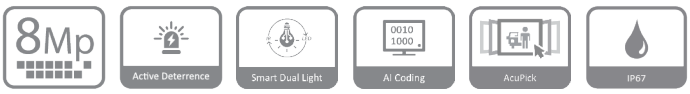

Cyber Security

Dahua network cameras employ a series of security technologies, including security authentication and authorization, access control protocols, trusted protection, encrypted transmission and encrypted storage. These technologies improve the camera's defense against external cyber threats and prevent malicious programs from compromising the device.

Protection (IP67, Wide Voltage)

IP67: The camera passes a series of strict test on dust and soak. It has dust-proof function, and the enclosure can work normally after soaking in 1 m deep water for 30 minutes.
Wide voltage: The camera allows ±30% (for some power supplies) input voltage tolerance (wide voltage range), and it is widely applied to outdoor environment with instable voltage.

Technical Specification

Camera

Image Sensor	1/2.7" CMOS
Max. Resolution	3840 (H) × 2160 (V)
ROM	256 MB
RAM	2 GB
Scanning System	Progressive
Electronic Shutter Speed	Auto/Manual 1/3 s–1/100,000 s
Min. Illumination	0.004 lux@F1.0 (Color, 30 IRE) 0.0004 lux@F1.0 (B/W, 30 IRE) 0 lux (illuminator on)
S/N Ratio	>56 dB
Illumination Distance	Up to 30 m (98.43 ft) (IR) Up to 30 m (98.43 ft) (Warm light)
Illuminator On/Off Control	Auto;Manual
Illuminator Number	2 (IR LED); 2 (Warm light)
Angle Adjustment	Pan: 0°–360° Tilt: 0°–90° Rotation: 0°–360°

Lens

Lens Type	Fixed-focal
Lens Mount	M12
Focal Length	2.8 mm;3.6 mm
Max. Aperture	F1.0
Field of View	2.8 mm: H: 106°; V: 55°; D: 125° 3.6 mm: H: 85; V: 45°; D: 102°
Iris Control	Fixed
Close Focus Distance	2.8 mm: 1.5 m (4.92 ft) 3.6 mm: 2.2 m (7.22 ft)

	Lens	Detect	Observe	Recognize	Identify
DORI Distance	2.8 mm	66.0 m (216.54 ft)	26.4 m (86.61 ft)	13.2 m (43.31 ft)	6.6 m (21.65 ft)
	3.6 mm	78.0 m (255.91 ft)	22.2 m (102.36 ft)	15.6 m (51.18 ft)	7.8 m (25.59 ft)
	*DORI (Detect, Observe, Recognize, Identify) is a standard system (EN-62676-4) for defining the ability of a person viewing the video to distinguish persons or objects within a covered area. The numbers in this table do not reflect intelligent function distances. For intelligent function distances, refer to installation and commissioning manual/project design tool.				

Intelligence

IVS (Perimeter Protection)	Intrusion, tripwire (the two functions support the classification and accurate detection of vehicle and human)
SMD	SMD 4.0
Smart Search	Work together with Smart NVR to perform refine intelligent search, event extraction and merging to event videos
AcuPick	Uses deep learning algorithms and works with back-end devices to accurately match targets, such as people and motor vehicles, and search through live and recorded videos to quickly locate targets.
AI SSA	Adopt deep learning algorithms to adjust the parameters of the image to suit the conditions.

Video

Video Compression	H.265; H.264; H.264H; H.264B; MJPEG (only supported by sub stream)
Smart Codec	Smart H.265+; Smart H.264+
AI Coding	AI H.265 (Compression rate ≥25%) AI H.264 (Compression rate ≥25%)
Video Frame Rate	Main stream: 3840 × 2160 @(1 fps–25/30 fps) Sub stream: 704 × 576@(1 fps–25 fps)/704 × 480@(1 fps–30 fps) Third stream: 1920 × 1080@ (1 fps–25/30 fps) *The values above are the max. frame rates of each stream; for multple streams, the values will be subjected to the total encoding capacity.
Stream Capability	3 streams
Resolution	8M (3840 × 2160); 6M (3072 × 2048); 5M (3072 × 1728/2592 × 1944); 4M (2688 × 1520/2560 × 1440); 3M (2048 × 1536/2304 × 1296); 1080p (1920 × 1080); 1.3M (1280 × 960); 720p (1280 × 720); D1 (704 × 576/704 × 480); VGA (640 × 480); CIF (352 × 288/352 × 240)
Bit Rate Control	VBR; CBR; ABR
Video Bit Rate	H.264: 3 kbps–16384 kbps H.265: 3 kbps–16384 kbps
Day/Night	Auto(ICR)/Color/B/W
BLC	Yes
HLC	Yes
WDR	120 dB
Scene Self-adaptation (SSA)	Yes
White Balance	Auto; natural; street lamp; outdoor; manual; regional custom
Gain Control	Auto/Manual
Noise Reduction	3D NR
Motion Detection	OFF/ON (4 areas, rectangular)
Region of Interest (RoI)	Yes (4 areas)
Smart Illumination	Yes
Defog	Yes
Image Rotation	0°/90°/180°/270° (Support 90°/270° with 2688 × 1520 resolution and lower)
Mirror	Yes
Privacy Masking	4 areas
LDC	Yes

Audio

Built-in MIC	Yes, built-in dual Mic
Built-in Speaker	Yes, built-in speaker
Audio Compression	PCM; G.711a; G.711Mu; G.726; G.723

Alarm

Alarm Event	No SD card; SD card full; SD card error; network disconnection; IP conflict; illegal access; motion detection; video tampering; tripwire; intrusion; scene changing; audio detection; voltage detection; external alarm; SMD; security exception

Network

Network Port	RJ-45 (10/100 Base-T)
SDK and API	Yes
Network Protocol	IPv4; IPv6; HTTP; TCP; UDP; ARP; RTP ; RTSP; RTCP; RTMP; SMTP; FTP; SFTP; DHCP; DNS; DDNS; QoS; UPnP; NTP; Multicast; ICMP; IGMP; NFS; PPPoE; SNMP; P2P
Interoperability	ONVIF (Profile S; Profile G; Profile T); CGI
User/Host	20 (Total bandwidth: 64 M)
Storage	FTP;SFTP; Micro SD card (support max. 512 GB); NAS
Browser	IE: IE11 Chrome Firefox
Management Software	Smart PSS Lite; DSS; DMSS
Mobile Client	iOS;Android
Cyber Security	Video encryption;Firmware encryption;Configuration encryption;Digest;WSSE;Account lockout;Security logs;IP/MAC filtering;Generation and importing of X.509 ce rtification;syslog;HTTPS;802.1x;Trusted boot;Trusted execution;Trusted upgrade

Certification

Certifications	CE-LVD: EN 62368-1; CE-EMC: Electromagnetc Compatbility Directve 2014/30/EU

Port

Audio Input	1 channel (RCA port)
Audio Output	1 channel (RCA port)
Alarm Input	1 channel in: wet contact, 5 mA 3–5 VDC
Alarm Output	1 channel out: wet contact, 300 mA 12 VDC

Power

Power Supply	12 VDC/PoE (802.3af)
Power Consumption	Basic: 4.5 W (12 VDC); 5.8 W (PoE) Max. (H.265+WDR+ warm light+siren and light active deterrence + intelligence on): 7.7 W (12 VDC); 9.4 W (PoE)

Environment

Operating Temperature	–40 °C to +60 °C (–40 °F to +140 °F)
Operating Humidity	≤95% (RH), non-condensing
Protection	IP67
Storage Temperature	–40 °C to +60 °C (–40 °F to +140 °F)
Storage Humidity	≤95% (RH), non-condensing

Structure

Casing Material	Metal + plastic
Product Dimensions	288.4 mm × 94.4 mm × 84.7 mm (11.35" × 3.72"× 3.33") (L × W × H)
Net Weight	1.0 kg (2.20 lb)
Gross Weight	1.23 kg (2.71 lb)

Ordering Information

Type	Model	Description
8MP Camera	DH-IPC-UFW4859T1-AS-PV	8MP Smart Dual Light Active Deterrence Fixed-focal Bullet WizSense + Network Camera
Accessories (Optional)	PFA135	Junction Box
	PFA130-E	Water-proof Junction Box
	PFA152-E	Pole Mount Bracket
	PFM321D	12 VDC 1A Power Adapter
	PFM900-E	Integrated Mount Tester
	TF-P100	MicroSD Memory Card

Accessories

Optional:

PFA135
Junction Box

PFA130-E
Water-proof Junction Box

PFA152-E
Pole Mount Bracket

PFM321D
12 VDC 1A Power Adapter

PFM900-E
Integrated
Mount Tester

TF-P100
Integrated
Mount Tester

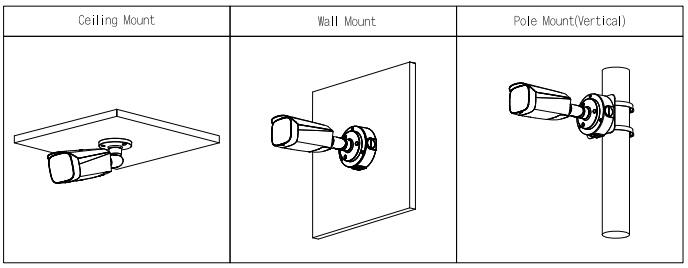

Dimensions (mm[inch])

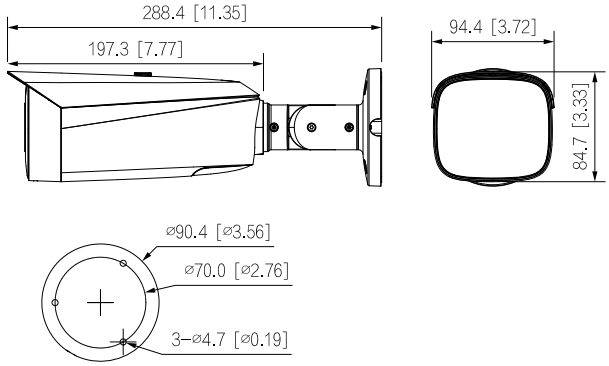

© 2023 Dahua. All rights reserved. Design and specifications are subject to change without notice.
The images, specifications and information mentioned in the document are only for reference, and might differ from the actual product.