# DH-IPC-UFW4659E-AS-IL

## 6MP Smart Dual Light Fixed-focal Bullet WizSense + Network Camera

Launched by Dahua Technology, WizSense + is a series of AI products and solutions that adopt independent AI chip and deep learning algorithm. It focuses on human and vehicle with high accuracy, enabling users to fast act on defined targets. Based on Dahua's advanced technologies, WizSense + provides intelligent, simple and inclusive products and solutions.

## Series Overview

With advanced deep learning algorithm, Dahua WizSense + 4 Series network camera supports intelligent functions, such as perimeter protection and smart motion detection. With starlight technology, this series camera provides a better image effect in the condition of low illuminance.

## Functions

**AI SSA**

Dahua AI Scene Self-adaptation (AI SSA) adopts deep learning algorithms to detect environmental conditions, such as rain, fog, backlight, low light and flicker, to adjust the parameters of the image to suit the conditions, ensuring that clear images are always produced.

**SMD 4.0**

Dahua Smart Motion Detection technology works with intelligent algorithms to classify targets that trigger motion detection alarms. It filters out objects that are not targets, such as small and large animals, to avoid triggering false alarms. With an AI NVR, Quick Pick technology becomes available, allowing you to easily search for and pick out human and vehicle targets from SMD event videos, prioritizing the highest matches.

**Perimeter Protection**

With deep learning algorithm, Dahua Perimeter Protection technology can recognize human and vehicle accurately. In restricted area (such as pedestrian area and vehicle area), the false alarms of intelligent detection based on target type (such as tripwire, intrusion, fast moving, parking detection, loitering detection and gathering detection) are largely reduced.

Smart Dual Light

Dahua Smart Dual Light technology adopts smart algorithm to detect targets. Usually, the IR illuminator is on at night; when the target appears in the monitoring area, the white light is on, and the camera records the full-color video and information of key events. That is, the camera links snapshot and video with full-color image. When the target is out of the monitoring area, the white light is off and the IR illuminator is on, which reduces light pollution efficiently.

- 6-MP 1/2.7" CMOS image sensor, low luminance, and high definition image.
- Outputs max. 6 MP (3288 ×1850)@25/30 fps.
- H.265 codec, high compression rate, ultra-low bit rate.
- Built-in multi-core light, the max. IR distance is 30 m and the max. warm light distance is 30 m.
- ROI, SMART H.264+/H.265+, AI H.264/H.265, flexible coding, applicable to various bandwidth and storage environments.
- Rotation mode, WDR, 3D NR, HLC, BLC, digital watermarking, applicable to various monitoring scenes.
- Intelligent monitoring: Intrusion, tripwire (the two function support the classification and accurate detection of vehicle and human).
- Abnormality detection: Motion detection, video tampering, scene changing, audio detection, no SD card, SD card full, SD card error, network disconnection, IP conflict, illegal access, and voltage detection.
- Alarm: 1 in, 1 out; audio: 1 in, 1 out; supports max. 512 G Micro SD card; built-in Mic.
- 12 VDC/PoE power supply.
- IP67 protection.
- SMD 4.0.
- Supports AI SSA.
- SMD area can be set in warm light areas that support triggering alarms.

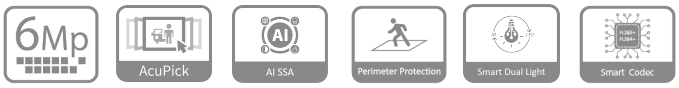


**Smart H.265+ & Smart H.264+**

With advanced scene-adaptive rate control algorithm, Dahua smart encoding technology realizes the higher encoding efficiency than H.265 and H.264, provides high-quality video, and reduces the cost of storage and transmission.

**Cyber Security**

Dahua network cameras employ a series of security technologies, including security authentication and authorization, access control protocols, trusted protection, encrypted transmission and encrypted storage. These technologies improve the camera's defense against external cyber threats and prevent malicious programs from compromising the device.

**Protection (IP67, Wide Voltage)**

IP67: The camera passes a series of strict test on dust and soak. It has dust-proof function, and the enclosure can work normally after soaking in 1 m deep water for 30 minutes. Wide voltage: The camera allows ±30% (for some power supplies) input voltage tolerance (wide voltage range), and it is widely applied to outdoor environment with instable voltage.

## Technical Specification

### Camera

| | |
|---|---|
| Image Sensor | 1/2.7" CMOS |
| Max. Resolution | 3288 (H) × 1850 (V) |
| ROM | 256 MB |
| RAM | 1 GB |
| Scanning System | Progressive |
| Electronic Shutter Speed | Auto/Manual 1/3 s–1/100,000 s |
| Min. Illumination | 0.007 lux@F1.4 (Color, 30 IRE)<br>0.0007 lux@F1.4 (B/W, 30 IRE)<br>0 lux (Illuminator on) |
| S/N Ratio | >56 dB |
| Illumination Distance | Up to 30 m (98.43 ft) (IR)<br>Up to 30 m (98.43 ft) (Warm light) |
| Illuminator On/Off Control | Auto;Manual |
| Illuminator Number | 2 (Multi-core (IR + warm) light) |
| Angle Adjustment | Pan: 0°–360°<br>Tilt: 0°–90°<br>Rotation: 0°–360° |

### Lens

| | |
|---|---|
| Lens Type | Fixed-focal |
| Lens Mount | M12 |
| Focal Length | 2.8 mm; 3.6 mm |
| Max. Aperture | F1.4 |
| Field of View | 2.8 mm: H: 110°; V: 58°; D: 132°<br>3.6 mm: H: 86°; V: 49°; D: 100° |
| Iris Control | Fixed |
| Close Focus Distance | 2.8 mm: 1.4 m (4.59 ft)<br>3.6 mm: 1.9 m (6.23 ft) |

| DORI Distance | Lens | Detect | Observe | Recognize | Identify |
|---|---|---|---|---|---|
| | 2.8 mm | 84.8 m ( 278.22 ft) | 33.9 m ( 111.22 ft) | 17.0 m ( 55.77 ft) | 8.5 m ( 27.89 ft) |
| | 3.6 mm | 98.7 m ( 323.82 ft) | 39.5 m ( 129.59 ft) | 19.7 m ( 64.63 ft) | 9.9 m ( 32.48 ft) |
| | *DORI (Detect, Observe, Recognize, Identify) is a standard system (EN-62676-4) for defining the ability of a person viewing the video to distinguish persons or objects within a covered area. The numbers in this table do not reflect intelligent function distances. For intelligent function distances, refer to installation and commissioning manual/project design tool. | | | | |

### Intelligence

| | |
|---|---|
| IVS (Perimeter Protection) | Intrusion, tripwire (the two functions support the classification and accurate detection of vehicle and human) |
| SMD | SMD 4.0 |
| AcuPick | Uses deep learning algorithms and works with back-end devices to accurately match targets, such as people and motor vehicles, and search through live and recorded videos to quickly locate targets. |
| AI SSA | Adopt deep learning algorithms to adjust the parameters of the image to suit the conditions. |
| Smart Search | Work together with Smart NVR to perform refine intelligent search, event extraction and merging to event videos |

### Video

| | |
|---|---|
| Video Compression | H.265; H.264; H.264H; H.264B; MJPEG (Only supported by sub stream) |
| Smart Codec | Smart H.265+; Smart H.264+ |
| AI Coding | AI H.265; AI H.264 |
| Video Frame Rate | Main stream: 3288 × 1850@(1–25/30 fps)<br>Sub stream: 1920 × 1080@(1–25/30 fps)<br>Third stream: 1920 × 1080@(1–25/30 fps)<br>*The values above are the max. frame rates of each stream; for multiple streams, the values will be subjected to the total encoding capacity. |
| Stream Capability | 3 streams |
| Resolution | 6M (3288 × 1850/3200 × 1800); 5M (2960 × 1688/2880 × 1620); 4M (2688 × 1520/2560 × 1440); 3M (2304 × 1296); 1080p (1920 × 1080); 720p (1280 × 720); D1 (704 × 576/704 × 480); VGA (640 × 480); CIF (352 × 288/352 × 240) |
| Bit Rate Control | VBR;CBR;ABR |
| Video Bit Rate | H.264: 3 kbps–16384 kbps;<br>H.265: 3 kbps–16384 kbps |
| Day/Night | Auto(ICR)/Color/B/W |
| BLC | Yes |
| HLC | Yes |
| WDR | 120 dB |
| Scene Self-adaptation (SSA) | Yes |
| White Balance | Auto; natural; street lamp; outdoor; manual; regional custom |
| Gain Control | Auto/Manual |
| Noise Reduction | 3D NR |
| Motion Detection | OFF/ON (4 areas, rectangular) |
| Region of Interest (RoI) | Yes (4 areas) |
| Smart Illumination | Yes |
| Smart Dual Light | Yes |
| Defog | Yes |
| Image Rotation | 0°/90°/180°/270° (Support 90°/270° with 2688 × 1520 resolution and lower) |
| Mirror | Yes |
| Privacy Masking | 8 areas |
| LDC | Yes |

### Audio

| | |
|---|---|
| Built-in MIC | Yes, built-in Mic |
| Audio Compression | PCM; G.711a; G.711Mu; G.726; G.723 |

## Alarm

| | |
|---|---|
| Alarm Event | No SD card; SD card full; SD card error; network disconnection; IP conflict; illegal access; motion detection; video tampering; tripwire; intrusion; scene changing; audio detection; voltage detection; external alarm; SMD; security exception |

## Network

| | |
|---|---|
| Network Port | RJ-45 (10/100 Base-T) |
| SDK and API | Yes |
| Network Protocol | IPv4; IPv6; HTTP; TCP; UDP; ARP; RTP; RTSP; RTCP; RTMP; SMTP; FTP; SFTP; DHCP; DNS; DDNS; QoS; UPnP; NTP; Multicast; ICMP; IGMP; NFS; SAMBA; PPPoE; SNMP; P2P |
| Interoperability | ONVIF (Profile S & Profile G & Profile T & Profile M); CGI |
| User/Host | 20 (Total bandwidth: 64 M) |
| Storage | FTP; SFTP; Micro SD card (support max. 512 GB); NAS |
| Browser | IE: IE11;<br>Chrome;<br>Firefox |
| Management Software | Smart PSS Lite; DSS; DMSS; DoLynk Care |
| Mobile Client | iOS;Android |
| Cyber Security | Video encryption;Firmware encryption;Configuration encryption;Digest;WSSE;Account lockout;Security logs;IP/MAC filtering;Generation and importing of X.509 certification;syslog;HTTPS;802.1x;Trusted boot;Trusted execution;Trusted upgrade;Session security;Security warning |

## Certification

| | |
|---|---|
| Certifications | CE-LVD: EN62368-1;<br>CE-EMC: Electromagnetic Compatibility Directive 2014/30/EU |

## Port

| | |
|---|---|
| Audio Input | 1 channel (RCA port) |
| Audio Output | 1 channel (RCA port) |
| Alarm Input | 1 channel in: wet contact, 5 mA 3–5 VDC |
| Alarm Output | 1 channel out: wet contact, 300 mA 12 VDC |

## Power

| | |
|---|---|
| Power Supply | 12 VDC/PoE (802.3af) |
| Dual Power Backup | When the power adapter and PoE provide power at the same time, disconnect one of them. The device will continue to work, but will not restart. |
| Power Consumption | Basic: 3.7 W (12 VDC); 5.4 W (PoE);<br>Max.: 8 W (12 VDC); 10 W (PoE) (H.265 + WDR + warm light + intelligence on) |

## Environment

| | |
|---|---|
| Operating Temperature | –40 °C to +60 °C (–40 °F to +140 °F) |
| Operating Humidity | ≤95% (RH), non-condensing |
| Storage Temperature | –40 °C to +60 °C (–40 °F to +140 °F) |
| Storage Humidity | ≤95% (RH), non-condensing |
| Protection | IP67 |

## Structure

| | |
|---|---|
| Casing Material | Metal |
| Product Dimensions | 192.7 mm × 70.5 mm × 66.4 mm (7.59" × 2.78" × 2.61") (L × W × H) |
| Net Weight | 610 g (1.34 lb) |
| Gross Weight | 770 g (1.70 lb) |

## Ordering Information

| Type | Model | Description |
|---|---|---|
| IP CAMERA | DH-IPC-UFW4659E-AS-IL | 6MP Smart Dual Light Fixed-focal Bullet WizSense + Network Camera |
| Accessories (Optional) | G3416GW | G3/4" Water Joint |
| | DH-PFA151 | Corner Mount Bracket |
| | DH-PFA130-E | Water-proof Junction Box |
| | DH-PFA152-E | Pole Mount Bracket |
| | DH-PFA134 | Junction Box |
| | DH-PFM321-EN | DC12V1A power adapter |
| | DH-PFM321D-EN | DC12V 1A power adapter |
| | DH-PFM320D-EN | DC12V2A power adapter |
| | PFM900-E | Integrated Mount Tester |
| | DHI-TF-P100/512GB | MicroSD Card |

## Accessories

Optional:

G3416GW
G3/4" Water Joint

DH-PFA151
Corner Mount Bracket

DH-PFA130-E
Water-proof Junction Box

DH-PFA152-E
Pole Mount Bracket

DH-PFA134
Junction Box

DH-PFM321-EN
DC12V1A power adapter

DH-PFM321D-EN
DC12V 1A power adapter

DH-PFM320D-EN
DC12V2A power adapter

PFM900-E
Integrated Mount Tester

DHI-TF-P100/512GB
MicroSD Card

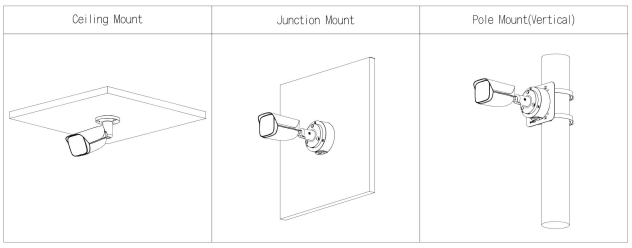


## Dimensions (mm[inch])

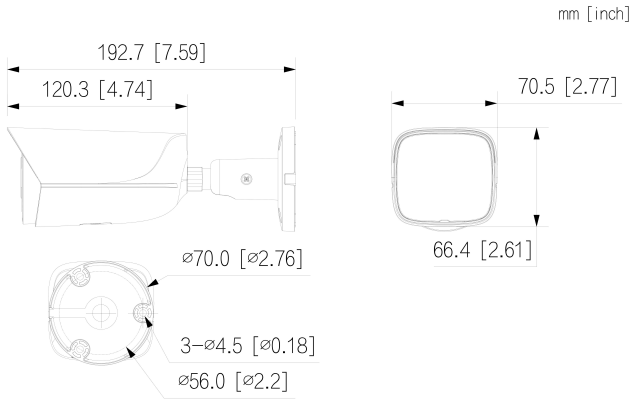



©2024 Dahua. All rights reserved. Design and specifications are subject to change without notice.
Pictures in the document are for reference only, and the actual product shall prevail.