DH-IPC-UFW4558T-Z(A)S-S2

5MP IR Vari-focal Bullet WizSense + Network Camera

Launched by Dahua Technology, WizSense + is a series of AI products and solutions that adopt independent AI chip and deep learning algorithm. It focuses on human and vehicle with high accuracy, enabling users to fast act on defined targets. Based on Dahua's advanced technologies, WizSense + provides intelligent, simple and inclusive products and solutions.

Series Overview

Dahua WizSense + 4 Series Network Camera greatly saves on bandwidth and storage space through its AI Coding technology. Driven by its advanced deep learning algorithms, the camera supports intelligent functions such as perimeter protection, smart motion detection (SMD), Quick Pick, and AI SSA (AI Scene Self-adaptation), making it easy and convenient to use. Starlight technology and its large aperture lens also allow the camera to produce clear, vivid images even in poor lighting conditions.

Functions

SMD 4.0

Dahua Smart Motion Detection technology works with intelligent algorithms to classify targets that trigger motion detection alarms. It filters out objects that are not targets, such as small and large animals, to avoid triggering false alarms. With an AI NVR, Quick Pick technology becomes available, allowing you to easily search for and pick out human and vehicle targets from SMD event videos, prioritizing the highest matches.

AI SSA

Dahua AI Scene Self-adaptation (AI SSA) adopts deep learning algorithms to detect environmental conditions, such as rain, fog, backlight, low light and flicker, to adjust the parameters of the image to suit the conditions, ensuring that clear images are always produced.

Smart H.265+ & Smart H.264+

With advanced scene-adaptive rate control algorithm, Dahua smart encoding technology realizes the higher encoding efficiency than H.265 and H.264, provides high-quality video, and reduces the cost of storage and transmission.

- 5-MP 1/2.7" CMOS image sensor, excellent low luminance performance and high definition of images.
- Outputs max. 5 MP (2960 × 1668) @20 fps and supports 4MP (2688 × 1520) @25/30 fps.
- H.265 codec, high compression rate, ultra-low bit rate.
- Built-in IR LED, max. IR distance: 60 m.
- ROI, SMART H.264 +/H.265+, flexible coding, applicable to various bandwidth and storage environments.
- Rotation mode, WDR, 3D NR, HLC, BLC, digital watermarking, applicable to various monitoring scenes.
- Intelligent detection: Intrusion, tripwire (support the classification and accurate detection of vehicle and human).
- Abnormality detection: Motion detection, privacy masking, scene changing, audio detection, no SD card, SD card full, SD card error, network disconnection, IP conflict, illegal access, and voltage detection.
- Alarm: 1 in, 1 out (Only - ZAS supports); audio: 1 in, 1 out (Only - ZAS supports); max. 256 G Micro SD card. built-in Mic.
- 12 VDC/PoE power supply, easy for installation.
- IP67, IK10 (optional) protection.
- SMD 4.0, AI SSA.

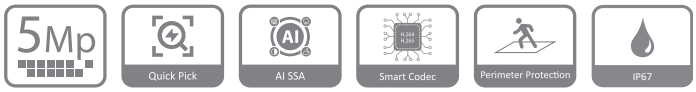

Perimeter Protection

With deep learning algorithm, Dahua Perimeter Protection technology can recognize human and vehicle accurately. In restricted area (such as pedestrian area and vehicle area), the false alarms of intelligent detection based on target type (such as tripwire, intrusion) are largely reduced.

Protection (IP67, Wide Voltage)

IP67: The camera passes a series of strict test on dust and soak. It has dust-proof function, and the enclosure can works normal after soaking in 1 m deep water for 30 minutes.
Wide voltage: The camera allows ±30% (for some power supplies) input voltage tolerance (wide voltage range), and it is widely applied to outdoor environment with instable voltage.

Cyber Security

Dahua network cameras employ a series of security technologies, including security authentication and authorization, access control protocols, trusted protection, encrypted transmission and encrypted storage. These technologies improve the camera's defense against external cyber threats and prevent malicious programs from comprising the device.

Technical Specification

Camera

Image Sensor	1/2.7" CMOS
Max. Resolution	2960 (H) × 1668 (V)
ROM	128 MB
RAM	512 MB
Scanning System	Progressive
Electronic Shutter Speed	Auto/Manual 1/3 s–1/100,000 s
Min. Illumination	0.005 lux@F1.5 (Color, 30 IRE) 0.0005 lux@F1.5 (B/W, 30 IRE) 0 lux (Illuminator on)
S/N Ratio	>56 dB
Illumination Distance	60 m (196.85 ft)
Illuminator On/Off Control	Auto/Manual
Illuminator Number	4 (IR LED)
Pan/Tilt/Rotation Range	Pan: 0°–360°; Tilt: 0°–90°; Rotation: 0°–360°

Lens

Lens Type	Motorized vari-focal
Lens Mount	ϕ14
Focal Length	2.7 mm–13.5 mm
Max. Aperture	F1.5
Field of View	Horizontal: 99°–28° Vertical: 71°–21° Diagonal: 134°–35°
Iris Control	Fixed
Close Focus Distance	0.8 m (2.62 ft)

	Lens	Detect	Observe	Recognize	Identify
DORI Distance	W	64.0 m (209.97 ft)	25.6 m (83.98 ft)	12.8 m (41.99 ft)	6.4 m (21.00 ft)
	T	210.0 m (688.98 ft)	84.0 m (275.59 ft)	42.0 m (137.80 ft)	21.0 m (68.90 ft)

Intelligence

IVS (Perimeter Protection)	Tripwire, intrusion (support the classification and accurate detection of vehicle and human)
AI SSA	Yes
Quick Pick	With AI NVR, quickly pick up the human/vehicle targets that users are interested in from SMD events
Smart Search	Work together with Smart NVR to perform refine intelligent search, event extraction and merging to event videos

Video

Video Compression	H.265; H.264; H.264H; H.264B; MJPEG (only supported by the sub stream)
Smart Codec	Smart H.265+ Smart H.264+
AI Coding	AI H.265 AI H.264
Video Frame Rate	Main stream: 2880 × 1620 @ (1–20) fps / 2960 × 1668 @ (1–20) fps / 2688 × 1520@(1–25/30 fps) Sub stream 1: 704 × 576 @ (1–25 fps)/ 704 × 480 @ (1–30 fps) Sub stream 2: 1920 × 1080 @ (1–25/30 fps) *The values above are the max. frame rates of each stream; for multiple streams, the values will be subjected to the total encoding capacity
Stream Capability	3 streams
Resolution	5M (2880 × 1620/2960 × 1668); 4M (2688 × 1520); 3.6M (2560 × 1440); 3M (2048×1536); 3M (2304×1296); 1080p (1920 × 1080); 1.3M(1280 × 960); 720p (1280 × 720); D1 (704 × 576/704×480); CIF (352 × 288/352 × 240); VGA (640 × 480)
Bit Rate Control	CBR/VBR
Video Bit Rate	H.264: 3 kbps–8192 kbps H.265: 3 kbps–8192 kbps
Day/Night	Auto (ICR)/Color/B/W
BLC	Yes
HLC	Yes
WDR	120 dB
Scene Self-adaptation (SSA)	Yes
White Balance	Auto; natural; street lamp; outdoor; manual; regional custom
Gain Control	Auto
Noise Reduction	3D NR
Motion Detection	OFF/ON (4 areas, rectangular)
Image Stabilization	Electronic Image Stabilization (EIS)
Region of Interest (RoI)	Yes (4 areas)
Defog	Yes
AFSA	Yes
Image Rotation	0°/90°/180°/270° (support 90°/270° with 2688 × 1520 resolution and lower)
Mirror	Yes
Privacy Masking	4 areas

Audio

Built-in MIC	Yes
Audio Compression	G.711a; G.711Mu; PCM; G.726; G.723

Alarm

Alarm Event	-ZAS: No SD card; SD card full; SD card error; service life warning (only supported by Dahua card); network disconnection; IP conflict; illegal access; motion detection; video tampering; intrusion; tripwire; scene changing; audio detection; voltage detection; defocus detection; external alarm; SMD; safety exception -ZS: No SD card; SD card full; SD card error; service life warning (only supported by Dahua card); network disconnection; IP conflict; illegal access; motion detection; video tampering; intrusion; tripwire; scene changing; audio detection; voltage detection; defocus detection; SMD; safety exception

Network

Network Port	RJ-45 (10/100 Base-T)
SDK and API	Yes
Network Protocol	IPv4; IPv6; HTTP;TCP; UDP; ARP; RTP; RTSP; RTCP; RTMP; SMTP; FTP; SFTP; DHCP; DNS; DDNS; QoS; UPnP; NTP; Multicast; ICMP; IGMP; NFS; SAMBA; PPPoE; SNMP
Cyber Security	Video encryption; Firmware encryption; Configuration encryption; Digest; WSSE; Account lockout; Security logs; IP/MAC filtering; Generation and importing of X.509 certification; syslog; HTTPS; 802.1x; Trusted boot; Trusted execution; Trusted upgrade
Interoperability	ONVIF (Profile S/Profile G/Profile T); CGI; P2P; Milestone; Genetec
User/Host	20 (Total bandwidth: 64 M)
Storage	FTP; SFTP; Micro SD card (support max. 256 G); NAS
Browser	IE: IE11 Chrome Firefox
Management Software	Smart PSS; DSS; DMSS
Mobile Client	iOS; Android

Certification

Certifications	CE-LVD: EN62368-1; CE-EMC: Electromagnetic Compatibility Directive 2014/30/EU; FCC: 47 CFR FCC Part 15, Subpart B; UL/CUL: UL62368-1 & CAN/CSA C22.2 No. 62368-1-14

Port

Audio Input	1 channel (RCA port) (Only- ZAS supports)
Audio Output	1 channel (RCA port) (Only- ZAS supports)
Alarm Input	1 channel in: 5 mA 3–5 VDC (Only- ZAS supports)
Alarm Output	1 channel out: 300 mA 12 VDC (Only- ZAS supports)

Power

Power Supply	12 VDC/PoE (802.3af)
Power Consumption	Basic: 2.8 W (12 VDC); 3.4 W (PoE)Max. (WDR + IR intensity + Intelligence): 7.4W (12 VDC); 8.5 W (PoE)

Environment

Operating Temperature	–30 °C to +60 °C (–22 °F to 140 °F) /Less than 95% (RH)
Storage Temperature	–40°C to +60°C (–40°F to 140°F)
Protection	IP67

Structure

Casing	Metal
Product Dimensions	244.1 mm × 79.0 mm × 75.9 mm (9.61" × 3.11" × 2.99") (L × W × H)
Net Weight	820 g (1.81 lb)
Gross Weight	1090 g (2.40 lb)

Ordering Information

Type	Model	Description
5MP Camera	DH-IPC-UFW4558TP-ZAS-S2	5MP IR Vari-focal Bullet WizSense + Network Camera
	DH-IPC-UFW4558TP-ZS-S2	5MP IR Vari-focal Bullet WizSense + Network Camera
Accessories (Optional)	PFA130-E	Junction Box
	PFA135	Junction Box
	PFA152-E	Pole Mount
	PFM321D	12 VDC 1 A Power Adapter
	PFM900-E	Integrated Mount Tester
	TF-P100	TLC SD Card

Accessories

Optional:

PFA130-E Junction Box

PFA135 Junction Box

PFA152-E Pole Mount

PFM321D 12 VDC 1 A Power Adapter

PFM900-E Integrated Mount Tester

TF-P100 TLC SD Card

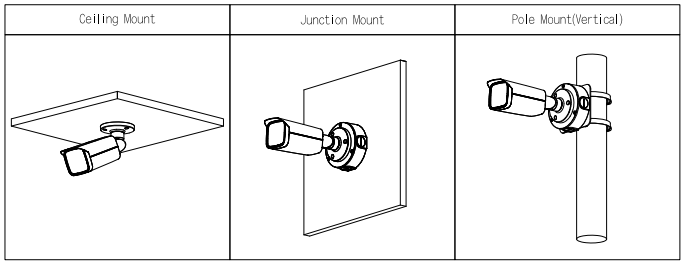

Dimensions (mm[inch])

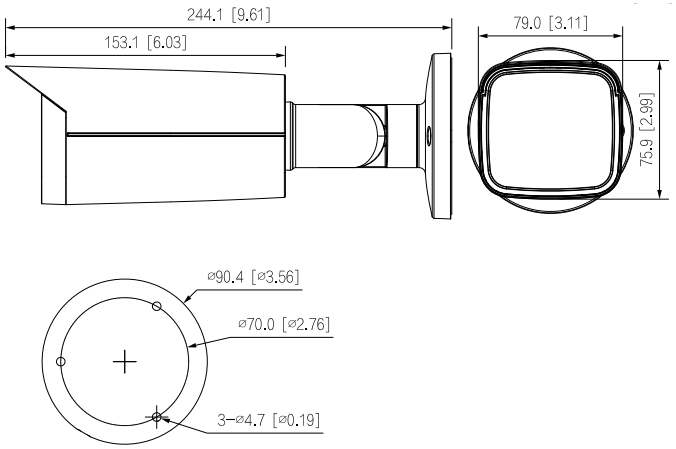

© 2022 Dahua. All rights reserved. Design and specifications are subject to change without notice.
The images, specifications and information mentioned in the document are only for reference, and might differ from the actual product.