DH-IPC-UFW3458T-Z(A)S

4MP IR Vari-focal Bullet WizSense + Network Camera

Launched by Dahua Technology, WizSense + is a series of AI products and solutions that adopt independent AI chip and deep learning algorithm. It focuses on human and vehicle with high accuracy, enabling users to fast act on defined targets. Based on Dahua's advanced technologies, WizSense + provides intelligent, simple and inclusive products and solutions.

System Overview

With advanced deep learning algorithm, Dahua WizSense + 3 Series network camera supports intelligent functions, such as perimeter protection and smart motion detection. With starlight technology, this series camera provides a better image effect in the condition of low illuminance.

Functions

SMD Plus

With intelligent algorithm, Dahua Smart Motion Detection technology can categorize the targets that trigger motion detection and filter the motion detection alarm triggered by non-concerned targets to realize effective and accurate alarm.

Smart H.265+ & Smart H.264+

With advanced scene-adaptive rate control algorithm, Dahua smart encoding technology realizes the higher encoding efficiency than H.265 and H.264, provides high-quality video, and reduces the cost of storage and transmission.

Perimeter Protection

With deep learning algorithm, Dahua Perimeter Protection technology can recognize human and vehicle accurately. In restricted area (such as pedestrian area and vehicle area), the false alarms of intelligent detection based on target type (such as tripwire, intrusion) are largely reduced.

- 4-MP 1/2.9" CMOS image sensor, low luminance, and high definition image.
- Outputs max. 4 MP (2688 × 1520)@20 fps, and supports 2560 × 1440 (2560 × 1440)@25/30 fps.
- H.265 codec, high compression rate, ultra-low bit rate.
- Built-in IR LED, and the max. illumination distance is 60 m.
- ROI, SMART H.264+/H.265+, flexible coding, applicable to various bandwidth and storage environments.
- Rotation mode, WDR, 3D NR, HLC, BLC, digital watermarking, applicable to various monitoring scenes.
- Intelligent monitoring: Intrusion, tripwire (the two functions support the classification and accurate detection of vehicle and human).
- Abnormality detection: Motion detection, video tampering, audio detection, no SD card, SD card full, SD card error, network disconnection, IP conflict, illegal access, and voltage detection.
- Alarm: 1 in, 1 out (Only - ZAS supports); audio: 1 in, 1 out (Only - ZAS supports); supports max. 256 G Micro SD card; built in MIC.
- 12 VDC/PoE power supply, easy for installation.
- IP67, IK10 (optional) protection.
- SMD Plus.

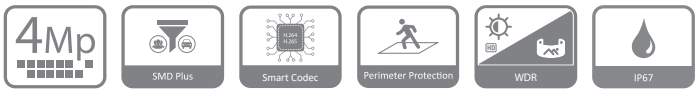

WDR

With advanced Wide Dynamic Range (WDR) technology, Dahua network camera provides clear details in the environment of strong brightness contrast. The bright and dark area can get clear video even in high brightness environment or with backlight shadow.

Cyber Security

Dahua network cameras employ a series of security technologies, including security authentication and authorization, access control protocols, trusted protection, encrypted transmission and encrypted storage. These technologies improve the camera's defense against external cyber threats and prevent malicious programs from compromising the device.

Protection (IP67, Wide Voltage)

IP67: The camera passes a series of strict test on dust and soak. It has dust-proof function, and the enclosure can work normally after soaking in 1 m deep water for 30 minutes.
Wide voltage: The camera allows ±30% (for some power supplies) input voltage tolerance (wide voltage range), and it is widely applied to outdoor environment with instable voltage.

Technical Specification

Camera

Image Sensor	1/2.9" CMOS
Max. Resolution	2688 (H) × 1520 (V)
ROM	128 MB
RAM	128 MB
Scanning System	Progressive
Electronic Shutter Speed	Auto/Manual 1/3 s–1/100,000 s
Min. Illumination	0.006 lux@F1.5 (Color, 30 IRE) 0.0006 lux@F1.5 (B/W, 30 IRE) 0 lux (Illuminator on)
S/N Ratio	>56 dB
Illumination Distance	Up to 60 m (196.85 ft) (IR LED)
Illuminator On/Off Control	Auto; Manual
Illuminator Number	4 (IR LED)
Pan/Tilt/Rotation Range	Pan: 0°–360° Tilt: 0°–90° Rotation: 0°–360°

Lens

Lens Type	Motorized vari-focal
Lens Mount	ϕ14
Focal Length	2.7 mm–13.5 mm
Max. Aperture	F1.5
Field of View	H: 104°–29°; V: 54°–16°; D: 125°–34°
Iris Control	Fixed
Close Focus Distance	0.8 m (2.62 ft)

	Lens	Detect	Observe	Recognize	Identify
DORI Distance	W	64.0 m (209.97 ft)	25.6 m (83.99 ft)	12.8 m (41.99 ft)	6.4 m (20.99 ft)
	T	210.0 m (688.97 ft)	84.0 m (275.59 ft)	42.0 m (137.80 ft)	21.0 m (68.90 ft)

Intelligence

IVS (Perimeter Protection)	Intrusion, tripwire (the two functions support the classification and accurate detection of vehicle and human)
Smart Search	Work together with Smart NVR to perform refine intelligent search, event extraction and merging to event videos

Video

Video Compression	H.265; H.264; H.264H; H.264B; MJPEG (Only supported by the sub stream)
Smart Codec	Smart H.265+; Smart H.264+
Video Frame Rate	Main stream: 2688 × 1520@(1–20 fps)/2560 × 1440@(1-25/30 fps) Sub stream: 704 × 576@(1–25 fps)/704 × 480@(1–30 fps) *The values above are the max. frame rates of each stream; for multiple streams, the values will be subjected to the total encoding capacity.
Stream Capability	2 streams
Resolution	2688 × 1520 (2688 × 1520); 2560 × 1440 (2560 × 1440); 2304 × 1296 (2304 × 1296); 1080p (1920 × 1080); 1.3M (1280 × 960); 720p (1280 × 720); D1 (704 × 576/704 × 480); VGA (640 × 480); CIF (352 × 288/352 × 240)
Bit Rate Control	CBR/VBR
Video Bit Rate	H.264: 32 kbps–6144 kbps; H.265: 12 kbps–6144 kbps
Day/Night	Auto(ICR)/Color/B/W
BLC	Yes
HLC	Yes
WDR	120 dB
White Balance	Auto; natural; street lamp; outdoor; manual; regional custom
Gain Control	Manual;Auto
Noise Reduction	3D NR
Motion Detection	OFF/ON (4 areas, rectangular)
Region of Interest (RoI)	Yes (4 areas)
Smart Illumination	Yes
Image Rotation	0°/90°/180°/270° (Support 90°/270° with 2688 × 1520 resolution and lower)
Mirror	Yes
Privacy Masking	4 areas

Audio

Built-in MIC	Yes
Audio Compression	G.711a; G.711Mu; G.726; PCM

Alarm

Alarm Event	No SD card; SD card full; SD card error; network disconnection; IP conflict; illegal access; motion detection; video tampering; tripwire; intrusion; audio detection; voltage detection; defocus detection; external alarm (Only- ZAS supports); SMD; security exception

Network

Network Port	RJ-45 (10/100 Base-T)
SDK and API	Yes
Network Protocol	IPv4; IPv6; HTTP; TCP; UDP; ARP; RTP; RTSP; RTCP; RTMP; SMTP; FTP; SFTP; DHCP; DNS; DDNS; NTP; Multicast; ICMP; IGMP; P2P
Interoperability	ONVIF (Profile S/Profile T); CGI
User/Host	6 (Total bandwidth: 36 M)
Storage	FTP; SFTP; Micro SD card (support max. 256 GB)
Browser	IE Chrome Firefox
Management Software	SmartPSS Lite; DSS; DMSS
Mobile Client	iOS; Android

Cyber Security	Video encryption; Configuration encryption; Digest; WSSE; Account lockout; Security logs; IP/MAC filtering; Generation and importing of X.509 certification; syslog; HTTPS; 802.1x; Trusted boot; Trusted execution; Trusted upgrade

Certification

Certifications	CE-LVD: EN62368-1; CE-EMC: Electromagnetic Compatibility Directive 2014/30/EU; FCC: 47 CFR FCC Part 15, Subpart B; UL/CUL: UL62368-1 & CAN/CSA C22.2 No. 62368-1-14

Port

Audio Input	1 channel (RCA port) (Only- ZAS supports)
Audio Output	1 channel (RCA port) (Only- ZAS supports)
Alarm Input	1 channel in: 5mA 3V–5V DC (Only- ZAS supports)
Alarm Output	1 channel out: 300mA 12V DC (Only- ZAS supports)

Power

Power Supply	12 VDC/PoE (802.3af)
Power Consumption	-ZS: Basic: 2.4 W (12 VDC); 3.1 W (PoE) Max. (H.265+intelligence on +WDR +IR on): 8.7 W (12 VDC); 10.1 W (PoE) -ZAS: Basic: 2.4 W (12 VDC); 3.1 W (PoE) Max. (H.265+intelligence on +WDR +IR on): 8.8 W (12 VDC); 10.2 W (PoE)

Environment

Operating Temperature	–30 °C to +60 °C (–22 °F to +140 °F)
Operating Humidity	≤95%
Storage Temperature	–40 °C to +60 °C (–40°F to +140°F)
Protection	IP67, IK10 (optional)

Structure

Casing Material	Metal
Product Dimensions	238.5 mm × 90.7 mm × 90.7 mm (9.39" × 3.57" × 3.57") (L × W × H)
Net Weight	-ZS: 0.73 kg (1.6 lb) -ZAS: 0.76 kg (1.7 lb)
Gross Weight	-ZS: 0.99 kg (2.2 lb) -ZAS: 1.02 kg (2.2 lb)

Ordering Information

Type	Model	Description
4MP Camera	DH-IPC-UFW3458T-ZAS	4MP IR Vari-focal Bullet WizSense + Network Camera
	DH-IPC-UFW3458T-ZS	4MP IR Vari-focal Bullet WizSense + Network Camera
Accessories (Optional)	PFA130-E	Junction Box
	PFA152-E	Pole Mount Bracket
	PFM321D	12 VDC 1A Power Adapter
	PFM900-E	Integrated Mount Tester
	TF-P100	MicroSD Memory Card

Accessories

Optional:

PFA130-E Junction Box

PFA152-E Pole Mount Bracket

PFM321D 12 VDC 1A Power Adapter

PFM900-E Integrated Mount Tester

TF-P100 MicroSD Memory Card

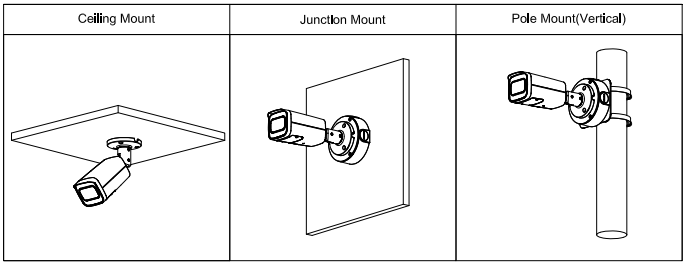

Dimensions (mm[inch])

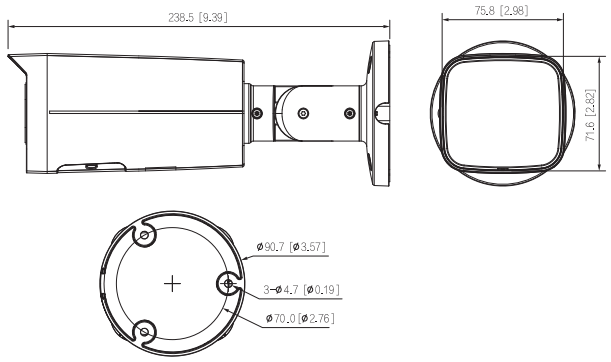

© 2023 Dahua. All rights reserved. Design and specifications are subject to change without notice.
The images, specifications and information mentioned in the document are only for reference, and might differ from the actual product.