# DH-IPC-HDW2649TM-S-IL

## 6MP Smart Dual Light Fixed-focal Eyeball WizSense Network Camera

WizSense

Launched by Dahua Technology, WizSense is a series of AI products and solutions that adopt independent AI chip and deep learning algorithm. It focuses on human and vehicle with high accuracy, enabling users to fast act on defined targets. Based on Dahua's advanced technologies, WizSense provides intelligent, simple and inclusive products and solutions.

### Series Overview

With advanced deep learning algorithm, Dahua WizSense 2 Series network camera supports intelligent functions, such as perimeter protection and smart motion detection. With starlight technology, this series camera provides a better image effect in the condition of low illuminance.

### Functions

**Smart Dual Light**

Dahua Smart Dual Light technology adopts smart algorithm to detect targets. Usually, the IR illuminator is on at night; when the target appears in the monitoring area, the white light is on, and the camera records the full-color video and information of key events. That is, the camera links snapshot and video with full-color image. When the target is out of the monitoring area, the white light is off and the IR illuminator is on, which reduces light pollution efficiently.

**SMD Plus**

With intelligent algorithm, Dahua Smart Motion Detection technology can categorize the targets that trigger motion detection and filter the motion detection alarm triggered by non-concerned targets to realize effective and accurate alarm.

* The parameters and datasheets below can only be applied to 2649-S2 series.

- 6-MP 1/2.7" CMOS image sensor, low illuminance, and high definition image.
- Outputs max 6 MP (3288 × 1850)@20 fps and supports 2688 × 1520 (2688 × 1520)@25/30 fps.
- H.265 codec, high compression rate, ultra-low bit rate.
- Built-in IR LED and warm light, the max IR distance is 30 m and the max warm light distance is 30 m.
- ROI, AI H.264/AI H.265(Super AI Coding), flexible coding, applicable to various bandwidth and storage environments.
- Abnormality detection: Motion detection, video tampering, audio detection, no SD card, SD card full, SD card error, network disconnection, IP conflict, invalid access, and voltage detection.
- Rotation mode, WDR, 3D NR, HLC, BLC, digital watermarking, applicable to various monitoring scenes.
- Intelligent monitoring: Intrusion, tripwire (the two functions support the classification and accurate detection of vehicle and human)
- Max 512 GB Micro SD card; built-in Mic.
- 12 VDC/PoE power supply, easy for installation.
- IP67 protection.
- SMD Plus.

**Perimeter Protection**

With deep learning algorithm, Dahua Perimeter Protection technology can recognize human and vehicle accurately. In restricted area (such as pedestrian area and vehicle area), the false alarms of intelligent detection based on target type (such as tripwire, intrusion, fast moving, parking detection, loitering detection and gathering detection) are largely reduced.

**Full-color**

With high-performance sensor and large aperture lens, Dahua Full-color technology can display clear colorful image in the environment of ultra-low illuminance. With this photosensitivity technology, the camera can capture more available light, and display more colorful image details.

### Protection (IP67, Wide Voltage)

IP67: The camera passes a series of strict test on dust and soak. It has dust-proof function, and the enclosure can work normally after soaking in 1 m deep water for 30 minutes.

Wide voltage: The camera allows ±30% (for some power supplies) input voltage tolerance (wide voltage range), and it is widely applied to outdoor environment with instable voltage.

### Super AI Coding

With advanced AI object detection and scene recognition technology, Super AI Coding integrates ROI, BAE, and ABR to achieve higher encoding efficiency than H.265 and H.264 while effectively reducing storage and transmission costs without compromising video quality.

## Technical Specification

### Camera

| | |
|---|---|
| Image Sensor | 1/2.7" CMOS |
| Max. Resolution | 3288 (H) × 1850 (V) |
| Scanning System | Progressive |
| Electronic Shutter Speed | Auto/Manual 1/3 s–1/100,000 s |
| Min. Illumination | 0.007 lux@F1.6 (Color, 30 IRE)<br>0.0007 lux@F1.6 (B/W, 30 IRE)<br>0 lux (Illuminator on) |
| S/N Ratio | >56 dB |
| Illumination Distance | Up to 30 m (98.43 ft) (IR LED)<br>Up to 30 m (98.43 ft) (Warm light) |
| Illuminator On/Off Control | Auto;Manual |
| Illuminator Number | 1 (IR LED); 1 (Warm light) |
| Angle Adjustment | Pan: 0° to 360°<br>Tilt: 0° to 78°<br>Rotation: 0° to 360° |

### Lens

| | |
|---|---|
| Lens Type | Fixed-focal |
| Lens Mount | M12 |
| Focal Length | 2.8 mm; 3.6 mm |
| Max. Aperture | F1.6 |
| Field of View | 2.8 mm: H: 112°; V: 61°; D: 132°<br>3.6 mm: H: 90°; V: 47°; D: 108° |
| Iris Control | Fixed |
| Close Focus Distance | 2.8 mm: 1.0 m (3.28 ft)<br>3.6 mm: 1.5 m (4.92 ft) |

| | Lens | Detect | Observe | Recognize | Identify |
|---|---|---|---|---|---|
| DORI Distance | 2.8 mm | 61.2 m ( 200.79 ft) | 24.5 m ( 80.38 ft) | 12.2 m ( 40.03 ft) | 6.1 m ( 20.01 ft) |
| | 3.6 mm | 78.0 m ( 255.91 ft) | 31.2 m ( 102.36 ft) | 15.6 m ( 51.18 ft) | 7.8 m ( 25.59 ft) |
| | *DORI (Detect, Observe, Recognize, Identify) is a standard system (EN-62676-4) for defining the ability of a person viewing the video to distinguish persons or objects within a covered area. The numbers in this table do not reflect intelligent function distances. For intelligent function distances, refer to installation and commissioning manual/project design tool. | | | | |

### Intelligence

| | |
|---|---|
| IVS (Perimeter Protection) | Intrusion, tripwire (the two functions support the classification and accurate detection of vehicle and human) |
| SMD | SMD Plus |

### Video

| | |
|---|---|
| Video Compression | H.265; H.264; H.264H; H.264B; MJPEG (Only supported by the sub stream) |
| AI Coding | AI H.265; AI H.264 （Super AI Coding）<br>*Includes smart codec technology, Smart H.265+ and Smart H.264+ |
| Video Frame Rate | Main stream: 3288×1850@(1–20 fps)<br>Sub stream: 704 × 576@(1–20 fps)/704 × 480@(1–20 fps)<br>Third stream: 352 × 288/352 × 240@1 fps<br>*The values above are the max frame rates of each stream; for multiple streams, the values will be subjected to the total encoding capacity. |
| Streaming Capability | 3 streams |
| Resolution | 6M (3288 × 1850/3200 × 1800); 5M (2880 × 1620); 4M (2688 × 1520); 3M (2048 × 1536/2304 × 1296); 1080p (1920 × 1080); 1.3M (1280 × 960); 720p (1280 × 720); D1 (704 × 576/704 × 480); VGA (640 × 480); CIF (352 × 288/352 × 240) |
| Bit Rate Control | VBR;CBR |
| Video Bit Rate | H.264: 32 kbps–8192 kbps;<br>H.265: 12 kbps–8192 kbps |
| Day/Night | Auto(ICR)/Color/B/W |
| BLC | Yes |
| HLC | Yes |
| WDR | 120 dB |
| White Balance | Auto; natural; street lamp; outdoor; manual; regional custom |
| Gain Control | Auto/Manual |
| Noise Reduction | 3D NR |
| Motion Detection | OFF/ON (4 areas, rectangular) |
| Region of Interest (RoI) | Yes (4 areas) |
| Smart Illumination | Yes |
| Smart Dual Light | Yes |
| Image Rotation | 0°/90°/180°/270° (supports 90°/270° with 2688 × 1520 resolution and lower) |
| Mirror | Yes |
| Privacy Masking | 4 areas |

### Audio

| | |
|---|---|
| Built-in MIC | Yes, built-in Mic |
| Audio Compression | G.711a; G.711Mu; PCM; G.726 |

## Alarm

| | |
|---|---|
| Alarm Event | No SD card; SD card full; SD card error; network disconnection; IP conflict; invalid access; motion detection; video tampering; tripwire; intrusion; audio detection; voltage detection; SMD; security exception |

## Network

| | |
|---|---|
| Network Port | RJ-45 (10/100 Base-T) |
| SDK and API | Yes |
| Network Protocol | IPv4; IPv6; HTTP; TCP; UDP; ARP; RTP; RTSP; RTCP; RTMP; SMTP; FTP; SFTP; DHCP; DNS; DDNS; NTP; Multicast; ICMP; IGMP; NFS; P2P; Auto Registration |
| Interoperability | ONVIF (Profile S & Profile G & Profile T); CGI |
| User/Host | 6 (Total bandwidth: 48 M) |
| Storage | FTP; SFTP; Micro SD card (support max 512 GB) |
| Browser | IE; Chrome; Firefox |
| Management Software | SmartPSS Lite; DSS; DMSS; DoLynk Care |
| Mobile Client | iOS;Android |
| Security | Digest;WSSE;Account lockout;Security logs;IP/MAC filtering;Generation and importing of X.509 certification;syslog;HTTPS;802.1x;Trusted boot;Trusted execution;Trusted upgrade;Session security;Security warning;SSL/TLS1.2;AES 256 |

## Certification

| | |
|---|---|
| Certifications | CE-LVD: EN62368-1;<br>CE-EMC: Electromagnetic Compatibility Directive 2014/30/EU |

## Power

| | |
|---|---|
| Power Supply | 12 VDC (±30%); PoE (802.3af) |
| Dual Power Backup | When the power adapter and PoE provide power at the same time, disconnect one of them. The device will continue to work, but will not restart. |
| Power Consumption | Basic: 1.61 W (12 VDC); 2.28 W (PoE);<br>Max.: 3.65 W (12 VDC); 4.65 W (PoE) (H.265 + intelligence + WDR + warm light on) |

## Environment

| | |
|---|---|
| Operating Temperature | –40 °C to +60 °C (–40 °F to +140 °F) |
| Operating Humidity | ≤95% (RH), non-condensing |
| Storage Temperature | –40 °C to +60 °C (–40 °F to +140 °F) |
| Storage Humidity | ≤95% (RH), non-condensing |
| Protection | IP67 |
| Anti-corrosion Level | Basic Protection<br>*The products are designed for general use and are applicable even in areas with no specific requirements for anti-corrosion protection. |

## Structure

| | |
|---|---|
| Casing Material | Inner core: Metal<br>Cover: Metal<br>Decoration ring: Plastic<br>Quick install mounting plate: Metal |
| Product Dimensions | 99.1 mm × Φ121.9 mm (3.90" × Φ4.80") |
| Net Weight | 0.53 kg (1.17 lb) |
| Gross Weight | 0.67 kg (1.48 lb) |

## Ordering Information

| Type | Model | Description |
|---|---|---|
| IP CAMERA | DH-IPC-HDW2649TM-S-IL | 6MP Smart Dual Light Fixed-focal Eyeball WizSense Network Camera |
| Accessories (Optional) | DH-PFB220C | Ceiling Mount Bracket |
| | DH-PFA109 | Mount Adapter |
| | DH-PFB305W | Wall Mount Bracket |
| | DH-PFA151 | Corner Mount Bracket |
| | DH-PFA150 | Pole Mount Bracket |
| | DH-PFB2203W | Wall Mount Bracket |
| | DH-PFA152-E | Pole Mount Bracket |
| | DH-PFA130-E | Water-proof Junction Box |
| | G3416GW | G3/4" Water Joint |
| | DH-PFM320-010EN | Power Adapter |
| | DH-PFM325D-1210EN | DC12V 1A Power Adapter |
| | DH-PFM325D-1215EN | DC12V 1.5A Power Adapter |
| | DH-PFM320-020EN | Power Adapter |
| | DH-PFM320D-EN | DC12V2A power adapter |
| | PFM900-E | Integrated Mount Tester |
| | DHI-TF-P100/512GB | MicroSD Card |

## Accessories

Optional:

DH-PFB220C
Ceiling Mount Bracket

DH-PFA109
Mount Adapter

DH-PFB305W
Wall Mount Bracket

DH-PFA151
Corner Mount Bracket

DH-PFA150
Pole Mount Bracket

DH-PFB2203W
Wall Mount Bracket

Optional:

DH-PFA152-E
Pole Mount Bracket

DH-PFA130-E
Water-proof Junction Box

G3416GW
G3/4" Water Joint

DH-PFM320-010EN
Power Adapter

DH-PFM325D-1210EN
DC12V 1A Power Adapter

DH-PFM325D-1215EN
DC12V 1.5A Power Adapter

DH-PFM320-020EN
Power Adapter

DH-PFM320D-EN
DC12V2A power adapter

PFM900-E
Integrated Mount Tester

DHI-TF-P100/512GB
MicroSD Card

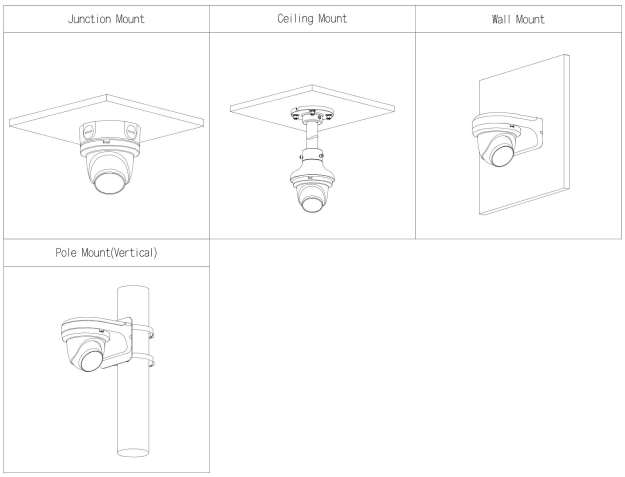


## Dimensions (mm[inch])

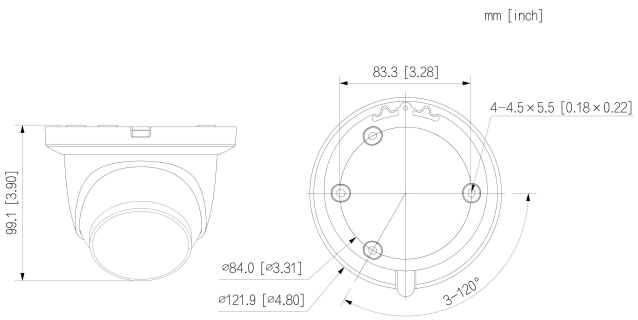



©Dahua. All rights reserved. Design and specifications are subject to change without notice.
Pictures in the document are for reference only, and the actual product shall prevail.