DH-IPC-HDW2449TM-S-IL

4MP Smart Dual Light Fixed-focal Eyeball WizSense Network Camera

Launched by Dahua Technology, WizSense is a series of AI products and solutions that adopt independent AI chip and deep learning algorithm. It focuses on human and vehicle with high accuracy, enabling users to fast act on defined targets. Based on Dahua's advanced technologies, WizSense provides intelligent, simple and inclusive products and solutions.

Series Overview

With advanced deep learning algorithm, Dahua WizSense 2 Series network camera supports intelligent functions, such as perimeter protection and smart motion detection. With starlight technology, this series camera provides a better image effect in the condition of low illuminance.

Functions

Smart Dual Light

Dahua Smart Dual Light technology adopts smart algorithm to detect targets. Usually, the IR illuminator is on at night; when the target appears in the monitoring area, the white light is on, and the camera records the full-color video and information of key events. That is, the camera links snapshot and video with full-color image. When the target is out of the monitoring area, the white light is off and the IR illuminator is on, which reduces light pollution efficiently.

SMD Plus

With intelligent algorithm, Dahua Smart Motion Detection technology can categorize the targets that trigger motion detection and filter the motion detection alarm triggered by non-concerned targets to realize effective and accurate alarm.

* The parameters and datasheets below can only be applied to 2449-S2 series.

- 4-MP 1/2.9" CMOS image sensor, low illuminance, and high definition image.
- Outputs max 2560 × 1440 (2560 × 1440)@25/30 fps.
- H.265 codec, high compression rate, ultra-low bit rate.
- Built-in IR LED and warm light, the max IR distance is 30 m and the max warm light distance is 30 m.
- ROI, AI H.264/AI H.265 (Super AI Coding), flexible coding, applicable to various bandwidth and storage environments.
- Abnormality detection: Motion detection, video tampering, audio detection, no SD card, SD card full, SD card error, network disconnection, IP conflict, illegal access, and voltage detection.
- Rotation mode, WDR, 3D NR, HLC, BLC, digital watermarking, applicable to various monitoring scenes.
- Intelligent monitoring: Intrusion, tripwire (the two functions support the classification and accurate detection of vehicle and human).
- Max 512 GB Micro SD card; built-in Mic.
- 12 VDC/PoE power supply, easy for installation.
- IP67 protection.
- SMD Plus.

Perimeter Protection

With deep learning algorithm, Dahua Perimeter Protection technology can recognize human and vehicle accurately. In restricted area (such as pedestrian area and vehicle area), the false alarms of intelligent detection based on target type (such as tripwire, intrusion, fast moving, parking detection, loitering detection and gathering detection) are largely reduced.

Super AI Coding

With advanced AI object detection and scene recognition technology, Super AI Coding integrates ROI, BAE, and ABR to achieve higher encoding efficiency than H.265 and H.264 while effectively reducing storage and transmission costs without compromising video quality.

Full-color

With high-performance sensor and large aperture lens, Dahua Full-color technology can display clear colorful image in the environment of ultra-low illuminance. With this photosensitivity technology, the

camera can capture more available light, and display more colorful image details.

Protection (IP67, Wide Voltage)

IP67: The camera passes a series of strict test on dust and soak. It has dust-proof function, and the enclosure can work normally after soaking in 1 m deep water for 30 minutes.

Wide voltage: The camera allows ±30% (for some power supplies) input voltage tolerance (wide voltage range), and it is widely applied to outdoor environment with instable voltage.

Technical Specification

Camera

Image Sensor	1/2.9" CMOS
Max. Resolution	2560 (H) × 1440 (V)
Scanning System	Progressive
Electronic Shutter Speed	Auto/Manual 1/3 s–1/100,000 s
Min. Illumination	0.006 lux@F1.6 (Color, 30 IRE) 0.0006 lux@F1.6 (B/W, 30 IRE) 0 lux (Illuminator on)
S/N Ratio	>56 dB
Illumination Distance	Up to 30 m (98.43 ft) (IR LED); Up to 30 m (98.43 ft) (Warm light)
Illuminator On/Off Control	Auto;Manual
Illuminator Number	1 (IR LED); 1 (Warm light)
Angle Adjustment	Pan: 0° to 360° Tilt: 0° to 78° Rotation: 0° to 360°

Lens

Lens Type	Fixed-focal
Lens Mount	M12
Focal Length	2.8 mm; 3.6 mm
Max. Aperture	F1.6
Field of View	2.8 mm: H: 100°; V: 56°; D: 117° 3.6 mm: H: 83°; V: 44°; D: 98°
Iris Control	Fixed
Close Focus Distance	2.8 mm: 1.0 m (3.28 ft) 3.6 mm: 1.5 m (4.92 ft)

	Lens	Detect	Observe	Recognize	Identify
DORI Distance	2.8 mm	61.6 m (202.10 ft)	24.6 m (80.71 ft)	12.3 m (40.35 ft)	6.2 m (20.34 ft)
	3.6 mm	78.0 m (255.91 ft)	31.2 m (102.36 ft)	15.6 m (51.18 ft)	7.8 m (25.59 ft)
	*DORI (Detect, Observe, Recognize, Identify) is a standard system (EN-62676-4) for defining the ability of a person viewing the video to distinguish persons or objects within a covered area. The numbers in this table do not reflect intelligent function distances. For intelligent function distances, refer to installation and commissioning manual/project design tool.				

Intelligence

IVS (Perimeter Protection)	Intrusion, tripwire (the two functions support the classification and accurate detection of vehicle and human)
SMD	SMD Plus

Video

Video Compression	H.265; H.264; H.264H; H.264B; MJPEG (Only supported by the sub stream)
AI Coding	AI H.265; AI H.264 (Super AI Coding) *Includes smart codec technology, Smart H.265+ and Smart H.264+
Video Frame Rate	Main stream: 2560 × 1440@(1–25/30 fps) Sub stream: 704 × 576@(1–25 fps)/704 × 480@(1–30 fps) Third stream: 352 × 288@1 fps/352 × 240@1 fps *The values above are the max frame rates of each stream; for multiple streams, the values will be subjected to the total encoding capacity.
Streaming Capability	3 streams
Resolution	4M (2560 × 1440); 3M (2304 × 1296); 1080p (1920 × 1080); 1.3M (1280 × 960); 720p (1280 × 720); D1 (704 × 576/704 × 480); VGA (640 × 480); CIF (352 × 288/352 × 240)
Bit Rate Control	VBR;CBR
Video Bit Rate	H.264: 32 kbps–6144 kbps; H.265: 12 kbps–6144 kbps
Day/Night	Auto(ICR)/Color/B/W
BLC	Yes
HLC	Yes
WDR	120 dB
White Balance	Auto; natural; street lamp; outdoor; manual; regional custom
Gain Control	Auto/Manual
Noise Reduction	3D NR
Motion Detection	OFF/ON (4 areas, rectangular)
Region of Interest (RoI)	Yes (4 areas)
Smart Illumination	Yes
Smart Dual Light	Yes
Image Rotation	0°/90°/180°/270° (supports 90°/270° with 2560 × 1440 resolution and lower)
Mirror	Yes
Privacy Masking	4 areas

Audio

Built-in MIC	Yes, built-in Mic
Audio Compression	G.711a; G.711Mu; PCM; G.726

Alarm

Alarm Event	No SD card; SD card full; SD card error; network disconnection; IP conflict; illegal access; motion detection; video tampering; tripwire; intrusion; audio detection; voltage detection; SMD; security exception

Network

Network Port	RJ-45 (10/100 Base-T)
SDK and API	Yes
Network Protocol	IPv4; IPv6; HTTP; TCP; UDP; ARP; RTP; RTSP; RTCP; RTMP; SMTP; FTP; SFTP; DHCP; DNS; DDNS; NTP; Multicast; ICMP; IGMP; NFS; P2P; Auto Registration
Interoperability	ONVIF (Profile S & Profile G & Profile T); CGI
User/Host	6 (Total bandwidth: 36 M)
Storage	FTP; SFTP; Micro SD card (supports max 512 GB)
Browser	IE; Chrome; Firefox
Management Software	SmartPSS Lite; DSS; DMSS; DoLynk Care
Mobile Client	iOS;Android
Security	Digest;WSSE;Account lockout;Security logs;IP/MAC filtering;Generation and importing of X.509 certification;syslog;HTTPS;802.1x;Trusted boot;Trusted execution;Trusted upgrade;Session security;Security warning;SSL/TLS1.2;AES 256

Certification

Certifications	CE-LVD: EN62368-1; CE-EMC: Electromagnetic Compatibility Directive 2014/30/EU

Power

Power Supply	12 VDC (±30%); PoE (802.3af)
Dual Power Backup	When the power adapter and PoE provide power at the same time, disconnect one of them. The device will continue to work, but will not restart.
Power Consumption	Basic: 1.7 W (12 VDC); 2.4 W (PoE); Max.: 4.2 W (12 VDC); 5.4 W (PoE) (H.265 + max resolution + max stream + WDR + warm light intensity + IVS)

Environment

Operating Temperature	–40 °C to +60 °C (–40 °F to +140 °F)
Operating Humidity	≤95% (RH), non-condensing
Storage Temperature	–40 °C to +60 °C (–40 °F to +140 °F)
Storage Humidity	≤95% (RH), non-condensing
Protection	IP67
Anti-corrosion Level	Basic Protection *The products are designed for general use and are applicable even in areas with no specific requirements for anti-corrosion protection.

Structure

Casing Material	Dome: Metal Cover: Metal Decorative ring: Plastic Quick install mounting plate: Metal
Product Dimensions	99.1 mm × Φ121.9 mm (3.90" × Φ4.80")
Net Weight	0.46 kg (1.01 lb)
Gross Weight	0.65 kg (1.43 lb)

Ordering Information

Type	Model	Description
IP CAMERA	DH-IPC-HDW2449TM-S-IL	4MP Smart Dual Light Fixed-focal Eyeball WizSense Network Camera
Accessories (Optional)	DH-PFA109	Mount Adapter
	DH-PFB220C	Ceiling Mount Bracket
	DH-PFA151	Corner Mount Bracket
	DH-PFB305W	Wall Mount Bracket
	DH-PFA150	Pole Mount Bracket
	DH-PFB2203W	Wall Mount Bracket
	DH-PFA152-E	Pole Mount Bracket
	G3416GW	G3/4" Water Joint
	DH-PFA130-E	Water-proof Junction Box
	DH-PFM320-010EN	Power Adapter
	DH-PFM325D-1210EN	DC12V 1A Power Adapter
	DH-PFM325D-1215EN	DC12V 1.5A Power Adapter
	DH-PFM320-020EN	Power Adapter
	DH-PFM320D-EN	DC12V2A power adapter
	PFM900-E	Integrated Mount Tester
	DHI-TF-P100/512GB	MicroSD Card

Accessories

Optional:

DH-PFA109
Mount Adapter

DH-PFB220C
Ceiling Mount Bracket

DH-PFA151
Corner Mount Bracket

DH-PFB305W
Wall Mount Bracket

DH-PFA150
Pole Mount Bracket

DH-PFB2203W
Wall Mount Bracket

DH-PFA152-E
Pole Mount Bracket

G3416GW
G3/4" Water Joint

DH-PFA130-E
Water-proof Junction Box

Optional:

DH-PFM320-010EN
Power Adapter

DH-PFM325D-1210EN
DC12V 1A Power Adapter

DH-PFM325D-1215EN
DC12V 1.5A Power Adapter

DH-PFM320-020EN
Power Adapter

DH-PFM320D-EN
DC12V2A power adapter

PFM900-E
Integrated Mount Tester

DHI-TF-P100/512GB
MicroSD Card

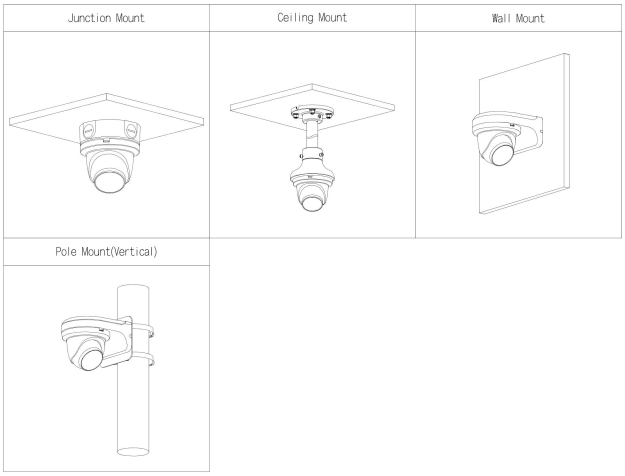

Dimensions (mm[inch])

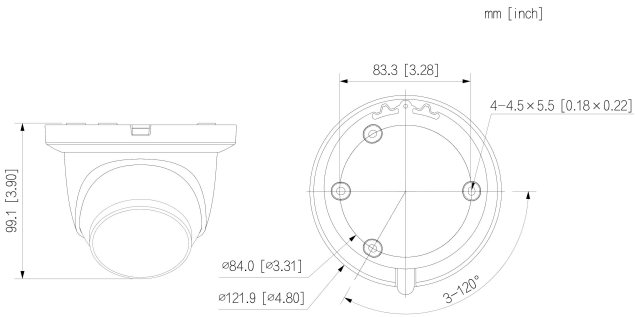

©Dahua. All rights reserved. Design and specifications are subject to change without notice.
Pictures in the document are for reference only, and the actual product shall prevail.