DH-IPC-HDW3649QM-S-IL

6MP Smart Dual Light Fixed-focal Eyeball WizSense Network Camera

Launched by Dahua Technology, WizSense is a series of AI products and solutions that adopt independent AI chip and deep learning algorithm. It focuses on human and vehicle with high accuracy, enabling users to fast act on defined targets. Based on Dahua's advanced technologies, WizSense provides intelligent, simple and inclusive products and solutions.

Series Overview

With advanced deep learning algorithm, Dahua WizSense 3 Series network camera supports intelligent functions, such as perimeter protection and smart motion detection. With starlight technology, this series camera provides a better image effect in the condition of low illuminance.

Functions

Xinghan Large-Scale AI Models-Vision

Xinghan Large-Scale AI Models-Vision seamlessly expands the storage and operational capacity of algorithmic models through the powerful integration of edge AI model algorithms and NPU computing power. Engineered with a lightweight transformer architecture and enhanced by model distillation and quantization techniques, it optimizes the computing power consumption of ViT operators. This enables the system to collaborate on multiple tasks simultaneously through joint inference between small and large models optimized for edge devices.

SMD 4.0

Dahua Smart Motion Detection technology works with intelligent algorithms to classify targets that trigger motion detection alarms. It filters out objects that are not targets, such as small and large animals, to avoid triggering false alarms. With an AI NVR, Quick Pick technology becomes available, allowing you to easily search for and pick out human and vehicle targets from SMD event videos, prioritizing the highest matches.

Perimeter Protection

With deep learning algorithm, Dahua Perimeter Protection technology can recognize human and vehicle accurately. In restricted area (such as pedestrian area and vehicle area), the false alarms of intelligent detection based on target type (such as tripwire, intrusion) are largely reduced.

- 1/2.7" CMOS image sensor, low luminance, and high definition image.
- Outputs max. 6 MP (3288 × 1850)@25/30 fps.
- H.265 codec, high compression rate, ultra-low bit rate.
- Built-in multi-core light, the max. IR distance is 30 m and the max. warm light distance is 30 m.
- ROI, SMART H.264+/H.265+, AI H.264/H.265, flexible coding, applicable to various bandwidth and storage environments.
- Rotation mode, WDR, 3D NR, HLC, BLC, digital watermarking, applicable to various monitoring scenes.
- Intelligent monitoring: Intrusion, tripwire (the two functions support the classification and accurate detection of vehicle and human), stay detection, loitering detection; face detection (full image).
- Abnormality detection: Motion detection, video tampering, scene changing, audio detection, no SD card, SD card full, SD card error, network disconnection, IP conflict, illegal access, and voltage detection.
- Max. 512 G Micro SD card; built-in Mic.
- 12 VDC/PoE power supply.
- IP67 protection.
- SMD 4.0.
- Supports AI SSA.
- SMD area can be set in warm light areas that support triggering alarms.

Smart Dual Light

Dahua Smart Dual Light technology adopts smart algorithm to detect targets. Usually, the IR illuminator is on at night; when the target appears in the monitoring area, the white light is on, and the camera records the full-color video and information of key events. That is, the camera links snapshot and video with full-color image. When the target is out of the monitoring area, the white light is off and the IR illuminator is on, which reduces light pollution efficiently.

Protection (IP67, Wide Voltage)

IP67: The camera passes a series of strict test on dust and soak. It has dust-proof function, and the enclosure can work normally after soaking in 1 m deep water for 30 minutes.
Wide voltage: The camera allows ±30% (for some power supplies) input voltage tolerance (wide voltage range), and it is widely applied to outdoor environment with instable voltage.

Technical Specification

Camera

Image Sensor	1/2.7" CMOS
Max. Resolution	3288 (H) × 1850 (V)
ROM	256 MB
RAM	1 GB
Scanning System	Progressive
Electronic Shutter Speed	Auto/Manual 1/3 s–1/100,000 s
Min. Illumination	0.005 lux@F1.4 (Color, 30 IRE) 0.0005 lux@F1.4 (B/W, 30 IRE) 0 lux (Illuminator on)
S/N Ratio	>56 dB
Illumination Distance	Up to 30 m (98.43 ft) (IR) Up to 30 m (98.43 ft) (Warm light)
Illuminator On/Off Control	Auto;Manual
Illuminator Number	2 (Multi-core (IR + warm) light)
Angle Adjustment	Pan: 0°–360° Tilt: 0°–80° Rotation: 0°–360°

Lens

Lens Type	Fixed-focal
Lens Mount	M12
Focal Length	2.8 mm; 3.6 mm
Max. Aperture	F1.4
Field of View	2.8 mm: H: 110°; V: 58°; D: 132° 3.6 mm: H: 86°; V: 49°; D: 100°
Iris Control	Fixed
Close Focus Distance	2.8 mm: 1.4 m (4.59 ft) 3.6 mm: 1.9 m (6.23 ft)

	Lens	Detect	Observe	Recognize	Identify
DORI Distance	2.8 mm	84.8 m (278.22 ft)	33.9 m (111.22 ft)	17.0 m (55.77 ft)	8.5 m (27.89 ft)
	3.6 mm	98.7 m (323.82 ft)	39.5 m (129.59 ft)	19.7 m (64.63 ft)	9.9 m (32.48 ft)
	*DORI (Detect, Observe, Recognize, Identify) is a standard system (EN-62676-4) for defining the ability of a person viewing the video to distinguish persons or objects within a covered area. The numbers in this table do not reflect intelligent function distances. For intelligent function distances, refer to installation and commissioning manual/project design tool.				

Intelligence

IVS (Perimeter Protection)	Intrusion, tripwire (the two functions support the classification and accurate detection of vehicle and human), stay detection, loitering detection
SMD	SMD 4.0
AcuPick	Uses deep learning algorithms and works with back-end devices to accurately match targets, such as people and motor vehicles, and search through live and recorded videos to quickly locate targets.
AI SSA	Adopt deep learning algorithms to adjust the parameters of the image to suit the conditions.
Face Detection (Full Image)	Face detection; snapshot; snapshot optimization; optimal face snapshot upload; face enhancement; face snapshot set as face or one-inch photo; snapshot strategies (real-time snapshot, quality priority and optimization snapshot); face angle filter; optimization time setting.
Smart Search	Work together with Smart NVR to perform refine intelligent search, event extraction and merging to event videos

Video

Video Compression	H.265; H.264; H.264H; H.264B; MJPEG (Only supported by sub stream)
AI Coding	AI H.265; AI H.264 *includes SmartCodec Technology，Smart H.264+ / H.265+
Video Frame Rate	Main stream: 3288 × 1850@(1–25/30 fps) Sub stream: 1920 × 1080@(1–25/30 fps) Third stream: 1920 × 1080@(1–25/30 fps) *The values above are the max. frame rates of each stream; for multiple streams, the values will be subjected to the total encoding capacity.
Streaming Capability	3 streams
Resolution	6M (3288 × 1850/3200 × 1800); 5M (2960 × 1668/2880 × 1620); 4M (2688 × 1520/2560 × 1440); 3M (2304 × 1296); 1080p (1920 × 1080); 720p (1280 × 720); D1 (704 × 576/704 × 480); VGA (640 × 480); CIF (352 × 288/352 × 240)
Bit Rate Control	VBR;CBR;ABR
Video Bit Rate	H.264: 3 kbps–16384 kbps; H.265: 3 kbps–16384 kbps
Day/Night	Auto(ICR)/Color/B/W
BLC	Yes
HLC	Yes
WDR	120 dB
Scene Self-adaptation (SSA)	Yes
White Balance	Auto; natural; street lamp; outdoor; manual; regional custom
Gain Control	Auto/Manual
Noise Reduction	3D NR
Motion Detection	OFF/ON (4 areas, rectangular)
Region of Interest (RoI)	Yes (4 areas)
Smart Illumination	Yes
Smart Dual Light	Yes
Defog	Yes
Image Rotation	0°/90°/180°/270° (Support 90°/270° with 2688 × 1520 resolution and lower)
Mirror	Yes
Privacy Masking	8 areas
LDC	Yes

Audio

Built-in MIC	Yes, built-in Mic
Audio Compression	PCM; G.711a; G.711Mu; G.726; G.723

Alarm

Alarm Event	No SD card; SD card full; SD card error; network disconnection; IP conflict; illegal access; motion detection; video tampering; tripwire; intrusion; stay detection; loitering detection; face detection (full image); scene changing; audio detection; voltage detection; SMD; security exception

Network

Network Port	RJ-45 (10/100 Base-T)
SDK and API	Yes
Network Protocol	IPv4; IPv6; HTTP; TCP; UDP; ARP; RTP; RTSP; RTCP; RTMP; SMTP; FTP; SFTP; DHCP; DNS; DDNS; QoS; UPnP; NTP; Multicast; ICMP; IGMP; NFS; SAMBA; PPPoE; SNMP; P2P
Interoperability	ONVIF (Profile S & Profile G & Profile T & Profile M); CGI
User/Host	20 (Total bandwidth: 64 M)
Storage	FTP; SFTP; Micro SD card (support max. 512 GB); NAS
Browser	IE: IE11; Chrome; Firefox
Management Software	Smart PSS Lite; DSS; DMSS; DoLynk Care
Mobile Client	iOS;Android
Security	Digest;WSSE;Account lockout;Security logs;IP/MAC filtering;Generation and importing of X.509 certification;syslog;HTTPS;802.1x;Trusted boot;Trusted execution;Trusted upgrade;Session security;Security warning

Certification

Certifications	CE-LVD: EN62368-1; CE-EMC: Electromagnetic Compatibility Directive 2014/30/EU

Power

Power Supply	12 VDC/PoE (802.3af)
Dual Power Backup	When the power adapter and PoE provide power at the same time, disconnect one of them. The device will continue to work, but will not restart.
Power Consumption	Basic: 3.7 W (12 VDC); 5.3 W (PoE); Max.: 7.4 W (12 VDC); 9.5 W (PoE) (H.265 + WDR + warm light + intelligence on)

Environment

Operating Temperature	–40 °C to +60 °C (–40 °F to +140 °F)
Operating Humidity	≤95% (RH), non-condensing
Storage Temperature	–40 °C to +60 °C (–40 °F to +140 °F)
Storage Humidity	≤95% (RH), non-condensing
Protection	IP67

Structure

Casing Material	Metal
Product Dimensions	105.5 mm × Φ122.0 mm (4.16" × Φ4.80")
Net Weight	0.53 kg (1.17 lb)
Gross Weight	0.71 kg (1.57 lb)

Ordering Information

Type	Model	Description
IP CAMERA	DH-IPC-HDW3649QM-S-IL	6MP Smart Dual Light Fixed-focal Eyeball WizSense Network Camera
Accessories (Optional)	DH-PFB220C	Ceiling Mount Bracket
	DH-PFA109	Mount Adapter
	DH-PFA151	Corner Mount Bracket
	DH-PFB305W	Wall Mount Bracket
	DH-PFA150	Pole Mount Bracket
	DH-PFB2203W	Wall Mount Bracket
	DH-PFA156	Pole Mount Bracket
	DH-PFA137	Junction Box
	DH-PFM321-EN	DC12V1A power adapter
	DH-PFM320D-EN	DC12V2A power adapter
	PFM900-E	Integrated Mount Tester
	DHI-TF-P100/512GB	MicroSD Card

Accessories

Optional:

DH-PFA109
Mount Adapter

DH-PFA137
Junction Box

DH-PFA150
Pole Mount Bracket

DH-PFA151
Corner Mount Bracket

DH-PFA156
Pole Mount Bracket

DH-PFB2203W
Wall Mount Bracket

DH-PFB220C
Ceiling Mount Bracket

DH-PFB305W
Wall Mount Bracket

DH-PFM320D-EN
DC12V2A power adapter

Optional:

DH-PFM321-EN
DC12V1A power adapter

DHI-TF-P100/512GB
MicroSD Card

PFM900-E
Integrated Mount Tester

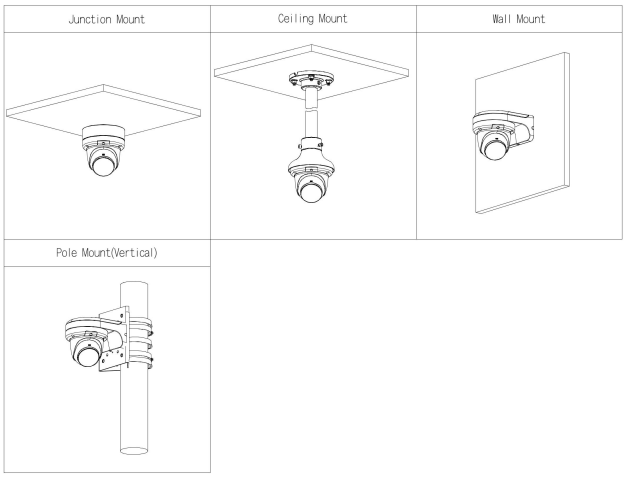

Dimensions (mm[inch])

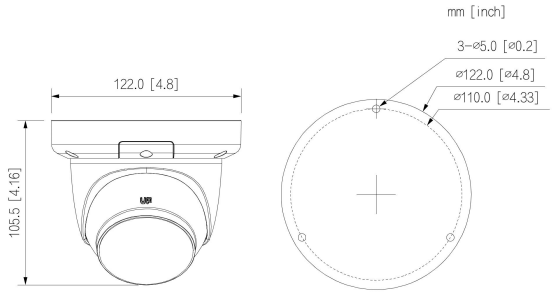

© 2025 Dahua. All rights reserved. Design and specificatons are subject to change without notce.
Pictures in the document are for reference only, and the actual product shall prevail.