DH-IPC-HDW2449TH-S-PROX-BLK

4MP WizColor X Fixed-focal Eyeball WizSense Network Camera

Launched by Dahua Technology, WizSense is a series of AI products and solutions that adopt independent AI chip and deep learning algorithm. It focuses on human and vehicle with high accuracy, enabling users to fast act on defined targets. Based on Dahua's advanced technologies, WizSense provides intelligent, simple and inclusive products and solutions.

Series Overview

With advanced deep learning algorithm, Dahua WizSense 2 Series network camera supports intelligent functions, such as perimeter protection and smart motion detection. With starlight technology, this series camera provides a better image effect in the condition of low illuminance.

Functions

WizColor X Technology

Dahua WizColor X technology integrates an AI-ISP 2.0 algorithm enhanced by large models and industry-leading large-pixel image sensors or UltraSight Lens technology. It greatly improves light sensitivity and delivers rich color layers and fine details at night. It also allows precise capture and recognition of moving targets with reduced motion blur.

AI-ISP 2.0

By utilizing deep learning image processing algorithms based on large models in combination with traditional image algorithms, it incorporates motion recognition detection algorithms. This enhances all-weather image quality, reduces motion blur, delivers clear images with fine details, and improves the camera's adaptability to various scenes.

- 4 MP 1/1.8" CMOS image sensor, low luminance, and high definition image.
- Outputs max 4 MP (2560 × 1440)@25/30 fps.
- H.265 codec, high compression rate, ultra-low bit rate.
- Built-in warm light, the max warm light distance is 30 m.
- ROI, AI H.264/AI H.265 (Super AI Coding), flexible coding, applicable to various bandwidth and storage environments.
- Rotation mode, WDR, 3D NR, HLC, BLC, digital watermarking, applicable to various monitoring scenes.
- Intelligent monitoring: Intrusion, tripwire (the two functions support the classification and accurate detection of vehicle and human).
- Abnormality detection: Motion detection, video tampering, audio detection, no SD card, SD card full, SD card error, network disconnection, IP conflict, invalid access, and voltage detection.
- Max 512 GB Micro SD card; built-in dual Mic.
- 12 VDC/PoE power supply.
- IP67 protection.
- SMD Plus.

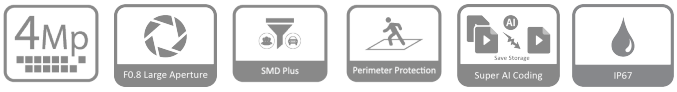

SMD Plus

With intelligent algorithm, Dahua Smart Motion Detection technology can categorize the targets that trigger motion detection and filter the motion detection alarm triggered by non-concerned targets to realize effective and accurate alarm.

Perimeter Protection

With deep learning algorithm, Dahua Perimeter Protection technology can recognize human and vehicle accurately. In restricted area (such as pedestrian area and vehicle area), the false alarms of intelligent detection based on target type (such as tripwire, intrusion, fast moving, parking detection, loitering detection and gathering detection) are largely reduced.

Super AI Coding

With advanced AI object detection and scene recognition technology, Super AI Coding integrates ROI, BAE, and ABR to achieve higher encoding efficiency than H.265 and H.264 while effectively reducing storage and transmission costs without compromising video quality.

Protection (IP67, Wide Voltage)

IP67: The camera passes a series of strict test on dust and soak. It has dust-proof function, and the enclosure can work normally after soaking in 1 m deep water for 30 minutes.

Wide voltage: The camera allows ±30% (for some power supplies) input voltage tolerance (wide voltage range), and it is widely applied to outdoor environment with instable voltage.

Technical Specification

Camera

Image Sensor	1/1.8" CMOS
Max. Resolution	2560 (H) × 1440 (V)
Scanning System	Progressive
Electronic Shutter Speed	Auto/Manual 1/3 s–1/100,000 s
Min. Illumination	0.00007 lux@F0.8
S/N Ratio	>56 dB
Illumination Distance	Up to 30 m (98.43 ft) (Warm light)
Illuminator On/Off Control	Auto;Manual
Illuminator Number	2 (Warm light)
Angle Adjustment	Pan: 0° to 360° Tilt: 0° to 78° Rotation: 0° to 360°

Lens

Lens Type	Fixed-focal
Lens Mount	M18
Focal Length	2.8 mm; 3.6 mm
Max. Aperture	F0.8
Field of View	2.8 mm: H: 106°; V: 56°; D: 125° 3.6 mm: H: 87°; V: 47°; D: 103°
Iris Control	Fixed
Close Focus Distance	2.8 mm: 1.8 m (5.91 ft) 3.6 mm: 2.6 m (8.53 ft)

	Lens	Detect	Observe	Recognize	Identify
DORI Distance	2.8 mm	59.3 m (194.55 ft)	23.7 m (77.76 ft)	11.9 m (39.04 ft)	5.9 m (19.36 ft)
	3.6 mm	71.3 m (233.92 ft)	28.5 m (93.50 ft)	14.3 m (46.92 ft)	7.1 m (23.29 ft)
	*DORI (Detect, Observe, Recognize, Identify) is a standard system (EN-62676-4) for defining the ability of a person viewing the video to distinguish persons or objects within a covered area. The numbers in this table do not reflect intelligent function distances. For intelligent function distances, refer to installation and commissioning manual/project design tool.				

Intelligence

IVS (Perimeter Protection)	Intrusion, tripwire (the two functions support the classification and accurate detection of vehicle and human)
SMD	SMD Plus

Video

Video Compression	H.265; H.264; H.264H; H.264B; MJPEG (Only supported by sub stream)
AI Coding	AI H.265; AI H.264 (Super AI Coding) *Includes smart codec technology, Smart H.265+ and Smart H.264+
Video Frame Rate	Main stream: 2560 × 1440@(1–25/30 fps) Sub stream: 704 × 576@(1–25 fps)/704 × 480@(1–30 fps) Third stream: 352 × 288@1 fps/352 × 240@1 fps *The values above are the max frame rates of each stream; for multiple streams, the values will be subjected to the total encoding capacity.
Streaming Capability	3 streams
Resolution	4M (2560 × 1440); 3M (2304 × 1296); 1080p (1920 × 1080); 1.3M (1280 × 960); 720p (1280 × 720); D1 (704 × 576/704 × 480); VGA (640 × 480); CIF (352 × 288/352 × 240)
Bit Rate Control	VBR;CBR
Video Bit Rate	H.264: 32 kbps–6144 kbps; H.265: 12 kbps–6144 kbps
Day/Night	Color/B/W
BLC	Yes
HLC	Yes
WDR	120 dB
White Balance	Auto; natural; street lamp; outdoor; manual; regional custom
Gain Control	Auto/Manual
Noise Reduction	3D NR
Motion Detection	OFF/ON (4 areas, rectangular)
Region of Interest (RoI)	Yes (4 areas)
Smart Illumination	Yes
Image Rotation	0°/90°/180°/270° (supports 90°/270° with 2560 × 1440 resolution and lower)
Mirror	Yes
Privacy Masking	4 areas
LDC	Yes

Audio

Built-in MIC	Yes, built-in dual Mic
Audio Compression	G.711a; G.711Mu; PCM; G.726

Alarm

Alarm Event	No SD card; SD card full; SD card error; network disconnection; IP conflict; invalid access; motion detection; video tampering; tripwire; intrusion; audio detection; voltage detection; SMD; security exception

Network

Network Port	RJ-45 (10/100 Base-T)
SDK and API	Yes

Network Protocol	IPv4; IPv6; HTTP; TCP; UDP; ARP; RTP; RTSP; RTCP; RTMP; SMTP; FTP; SFTP; DHCP; DNS; DDNS; NTP; Multicast; ICMP; IGMP; NFS; P2P; Auto Registration
Interoperability	ONVIF (Profile S & Profile G & Profile T); CGI
User/Host	6 (Total bandwidth: 36 M)
Storage	FTP; SFTP; Micro SD card (support max 512 GB)
Browser	IE; Chrome; Firefox
Management Software	Smart PSS Lite; DSS; DMSS; DoLynk Care
Mobile Client	iOS;Android
Security	Digest;WSSE;Account lockout;Security logs;IP/MAC filtering;Generation and importing of X.509 certification;syslog;HTTPS;802.1x;Trusted boot;Trusted execution;Trusted upgrade;Session security;Security warning;SSL/TLS1.2;AES 256

Certification

Certifications	CE-LVD: EN62368-1; CE-EMC: Electromagnetic Compatibility Directive 2014/30/EU

Power

Power Supply	12 VDC (±30%); PoE (802.3af)
Dual Power Backup	When the power adapter and PoE provide power at the same time, disconnect one of them. The device will continue to work, but will not restart.
Power Consumption	Basic: 1.9 W (12 VDC); 2.7 W (PoE); Max.: 3 W (12 VDC); 3.9 W (PoE) (Intelligence + WDR + illumination on)

Environment

Operating Temperature	–40 °C to +60 °C (–40 °F to +140 °F)
Operating Humidity	≤95% (RH), non-condensing
Storage Temperature	–40 °C to +60 °C (–40 °F to +140 °F)
Storage Humidity	≤95% (RH), non-condensing
Protection	IP67
Anti-corrosion Level	Basic Protection *The products are designed for general use and are applicable even in areas with no specific requirements for anti-corrosion protection.

Structure

Casing Material	Dome: Metal Cover: Metal Decorative ring: Plastic Quick install mounting plate: Metal
Product Dimensions	111.7 mm × Φ135 mm (4.40" × Φ5.31")
Net Weight	0.59 kg (1.30 lb)
Gross Weight	0.84 kg (1.85 lb)

Ordering Information

Type	Model	Description
IP CAMERA	DH-IPC-HDW2449TH-S-PROX-BLK	4MP WizColor X Fixed-focal Eyeball WizSense Network Camera
Accessories (Optional)	DH-PFB220C-B	Ceiling Mount Bracket
	DH-PFA10C-B	Mount Adapter
	DH-PFB211W-B	Wall Mount Bracket
	DH-PFA156-B	Pole Mount Bracket
	G3416B	G3/4" Water Joint
	DH-PFA13F-E-B	Junction Box
	DH-PFM320-010EN	DC12V 1A Power Adapter
	DH-PFM325D-1210EN	DC12V 1A Power Adapter
	DH-PFM325D-1215EN	DC12V 1.5A Power Adapter
	DH-PFM320-020EN	DC12V 2A Power Adapter
	DH-PFM320D-EN	DC12V 2A Power Adapter
	PFM900-E	Integrated Mount Tester
	DHI-TF-P100/512GB	MicroSD Card

Accessories

Optional:

DH-PFB220C-B
Ceiling Mount Bracket

DH-PFA10C-B
Mount Adapter

DH-PFB211W-B
Wall Mount Bracket

DH-PFA156-B
Pole Mount Bracket

G3416B
G3/4" Water Joint

DH-PFA13F-E-B
Junction Box

DH-PFM320-010EN
DC12V 1A Power Adapter

DH-PFM325D-1210EN
DC12V 1A Power Adapter

DH-PFM325D-1215EN
DC12V 1.5A Power Adapter

DH-PFM320-020EN
DC12V 2A Power Adapter

DH-PFM320D-EN
DC12V 2A Power Adapter

PFM900-E
Integrated Mount Tester

Optional:

DHI-TF-P100/512GB
MicroSD Card

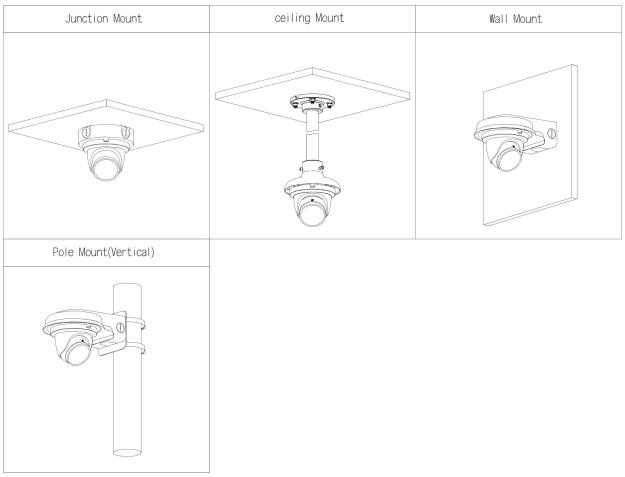

Dimensions (mm[inch])

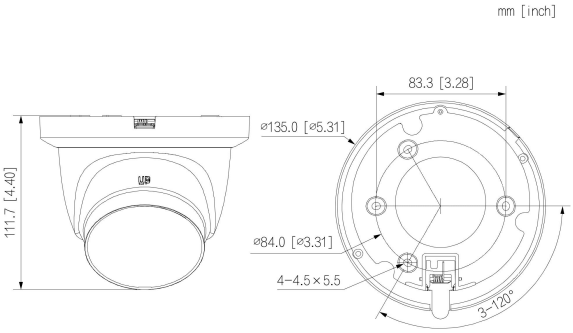

©Dahua. All rights reserved. Design and specifications are subject to change without notice.
Pictures in the document are for reference only, and the actual product shall prevail.