DIN RAIL POWER SUPPLY, 120 W, 48 V



Mechanical/Environmental

Input voltage	100 - 240 VAC
Input frequency	50/60 Hz
Input current	2.25 A
Output voltage	48 VDC
Output current	2.5 A
Input voltage absolute maximum	90 - 264 VAC
Input frequency absolute maximum	47 - 63 Hz
Inrush current	120 A
Output voltage absolute maximum	47 - 56 VDC
Short circuit protection	✓
HIPOT (dielectric withstand test) – Primary to Secondary	4242 VDC
MTBF	453300 h
Input connector	Screw terminal
Output connector	Screw terminal
Weight	520 g

Copyright © 2026, UAB TELTONIKA NETWORKS.
Specifications and information given in this document are subject to change by UAB TELTONIKA NETWORKS without prior notice.

*Ambient temperature	-20 °C ~ +70 °C
Safety	EN 62368-1:2014+A11:2017 BS EN 62368-1:2014+A11:2017
EMC	EN 55032:2015 / A1:2020 BS EN 55032:2015 + A1:2020 EN 55035:2017 / A11:2020 BS EN 55035:2017 + A11:2020 EN IEC 61000-3-2:2019 / A1:2021 BS EN IEC 61000-3-2:2019 EN 61000-3-3:2013 / A2:2021 BS EN 61000-3-3:2013 AMD.1:2019

***Maximum ambient temperature at full load: +50 °C**
The ambient temperature derating of 3.5 °C/1000 m for operating altitude higher than 2000 m (6500 ft).

Spatial measurements

No.	Attribute
1.	DC Output (V-)
2.	DC Output (V-)
3.	DC Output (V+)
4.	DC Output (V+)
5.	LED Green (DC OK)
6.	Voltage adjustment
7.	AC/L
8.	AC/N
9.	PE

No.	Stripping length	Tightening torque
1,2,3,4	5–7 mm	0.4 Nm
7,8,9	5–7 mm	0.5 Nm

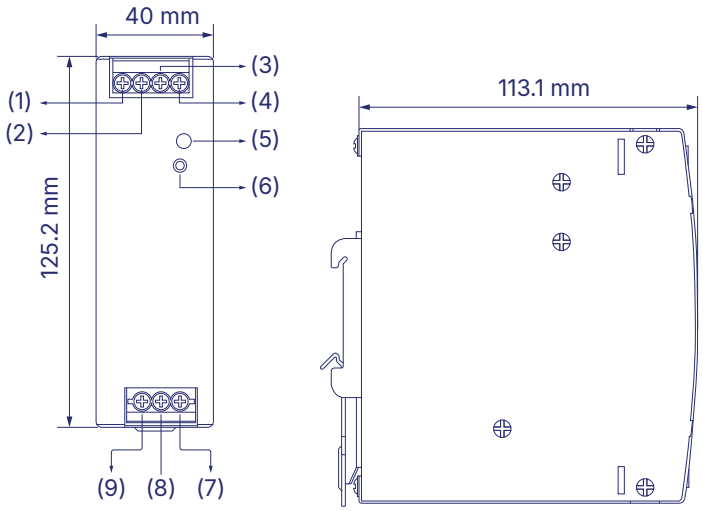

Installation clearances: top with 40 mm, bottom with 20mm, left and right with 5 mm. Increase the space to 10–15 mm when the adjacent device is a heat source.

Copyright © 2026, UAB TELTONIKA NETWORKS.
Specifications and information given in this document are subject to change by UAB TELTONIKA NETWORKS without prior notice.