UT801/802

Operating Manual

Bench Type Digital Multimeters

Overview

Digital Bench-Type Multimeter Model UT801 is the maximum reading 1999 and 3 1/2 digits and UT802 is the maximum reading 19999 and 4 1/2 digits, both models are in manual range, DC / AC current type digital multimeter, This is also the extra large characters in LCD display backlight with full function, full measurement and full overload protection as well as a good product design outlook, In addition to all the conventional features include DC/AC voltage, DC/AC current, resistance, frequency, capacitance, temperature ℃, Transistor hFE、diode and continuity buzzer.

This operating manual covers information on safety and cautions. Please read the relevant information carefully and observe all the Warnings and Notes strictly.

Unpacking Inspection

Open the package case and take out the Meter. Check the following items carefully to see any missing or damaged part. If you find any missing or damage, please contact your dealer in your country.

- Operating Manual 1 piece
- Test Lead 1 pair
- Alligator Clip 1 pair
- K Type Temperature Probe 1 piece
  (For the temperature under 230℃testing)
- Multi-Purpose Socket 1 piece
- Power Cord 1 piece
  (AC220V 50Hz DC9V/200mA)

Safety Information

This Meter complies with the standards IEC61010-1 in pollution degree 2, overvoltage category (CAT II 1000V) and double insulation. If you can not follow up this operating instruction to use the meter and it reduces the chance to have an using protection.

1. Before using the Meter and Test Leads inspect both items. Do not use the Meter and Test Leads if it is damaged or the case (or part of the case) is removed or no reaction on LCD display. Prohibited to use the meter without housing or housing without screw fix up in order to avoid possible electric shock or to avoid possible damage to the meter or to the equipment under test.
2. If the damage of test leads, use only the same model number or identical electrical specifications replacement parts.
3. Do not use your finger to touch on any testing cable, connector, unused terminal input or circuit during the testing stage.
4. When the meter working at an effective voltage over 60V in DC or 30V rms in AC, special care should be taken for there is danger of electric shock.
5. Selecting the correct terminal input and turn the rotary switch to select the measuring function. In case of no any idea on the value input of the current, just simply test from the high value to low one.
6. Do not overload voltage or current on EITHER between terminal and terminal OR between terminal and grounding which indicate on meter limitation.
7. The rotary switch should be placed in the right position and no any changeover of range shall be made during measurement is conducted to prevent damage of the Meter.
8. Do not use or store the meter in an environment of high temperature, humidity, flammable and electromagnetic environment. The performance of the meter may deteriorate after dampened.
9. The internal circuit of the meter shall not be altered at will to avoid damage of the meter and any accident
10. Replace the battery as soon as the battery indicator " ▭ "Appears. With a low battery, the meter might produce false readings that can lead to electric shock and personal injury.
11. Turn the meter off when it is not is use and take out the battery when not using for a long time.

General Specifications

1. Maximum Voltage between terminal input and COM: 1000V(except 200mV, 250V)
2. μA mA terminal input protection: (CE)250mA 265V auto recovery fuse
3. 10A terminal input protection: (CE)F1 (10A H 1000V) Fast type melted fuse Φ10.3x38mm
4. Resistance input protection: PTC/1000V
5. Capacitance input protection: (CE)F2, F3 (0.5A H 1000V) Fast type melted fuse Φ6.35x31.8mm
6. Frequency input protection: PTC/1000V
7. Temperature input protection: (CE)0.5A 1000V fuse
8. ⊣⊢ •ıı)) terminal input protection: PTC/1000V
9. hFE input protection: (CE)250mA 265V auto recovery fuse, F3 (0.5A H 1000V) Fast type melted fuse Φ6.35x31.8mm
10. Display: LCD full function signal display, maximum reading is 1999(UT801) , 19999(UT802) Updates 2-3 times / second
11. Range: Manual
12. Polarity Display: Auto
13. Overload indication: 1
14. Battery Deficiency: ▭
15. Operating Temperature: 0～40℃(32℉～104℉)
16. Storing Temperature: -10～50℃(14℉～122℉)
17. Relative Humidity: 0℃～30℃ below ≤75%
    30℃～40℃ ≤50%
18. Electromagnetic Field: Under 1V/m the influence of radiated radio-frequency electromagnetic field phenomenon, Total accuracy= specific accuracy+ measurement 5%, Over 1V/m radiated radio-frequency electromagnetic which do not have any reference data on this topic.
19. Power: AC(external power adapter AC220V/ DC9V-200mA) or DC(internal battery type 2 R14/1.5V 6 pieces)
20. Product size: (300x245x105)mm
21. Product Net Weight : About1500g(without the accessories)
22. Safety Compaliances : IEC 61010: CAT Ⅱ 1000V

LCD Display

1. *Manual Range* Indicator of manual range
2. *Warning !* Indicator for Warning signal
3. ▭ The battery is low
4. ϟ Indicator for high voltage signal
5. — Indicator for Negative reading display
6. *AC* Indicator for AC voltage or current (DC indicator do not display)
7. H Data hold is active
8. ⊣⊢ Test of diode
9. •ıı)) The continuity buzzer is on
10. Number Indicates testing reading
11. Units of measurement:

mV, V	Unit of Voltage: The millivolt, volt
μA, mA, A	Unit of current: Microampere, milliampere, ampere
Ω, kΩ, MΩ	Unit of electrical resistance: Ohm, thousand ohms, trillion ohm
nF/μF	Unit of electrical capacity: Accepts the farad, the microfarad
kHz	Unit of Frequency: Kilohertz
℃	Unit of Temperature: Degree Celsius Factor
β	Unit of Triode enlargement: Times

Functions

Symbol	Terminal Input	Explanation
V	V ⟷ COM	DC Voltage Measurement
V	V ⟷ COM	AC Voltage Measurement
Ω	V ⟷ COM	Resistance Measurement
⊣⊢ •ıı))	V ⟷ COM	Diode / Continuity Buzzer Measurement
kHz	V ⟷ COM	Frequency Measurement
A⎓	mA μA ⟷ COM	mA/μA DC Current Measurement
	10A ⟷ COM	ADC Current Measurement
A~	mA μA ⟷ COM	mA/μA AC Current Measurement
	10A ⟷ COM	A AC Current Measurement
F	V⟷ mA μA	Capacitance Measurement
(Use Multi-Purpose Socket)		
℃	V ⟷ mA μA	Temperature Measurement
(Use Multi-Purpose Socket)		
hFE	V ⟷mA μA	Triode Enlargement Factor Measurement
(Use Multi-Purpose Socket)		

Functional Buttons

⏻	Turn the power on and off Turn the display
LIGHT	backlight on and off(suitable for battery supply, backlight turn on about 10 seconds after auto shut down.)
HOLD	Press Hold to enter and exit the hold mode in any mode, the meter beeps.

Operational Measurement Guide (see Diagram 1, 2, 3)

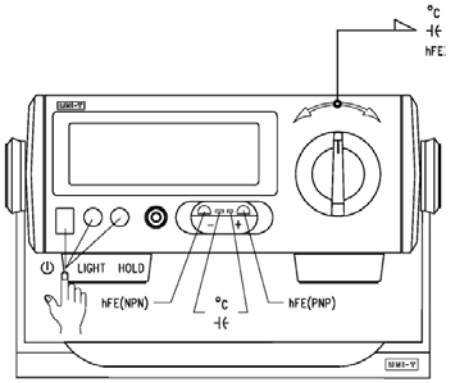

Diagram 1

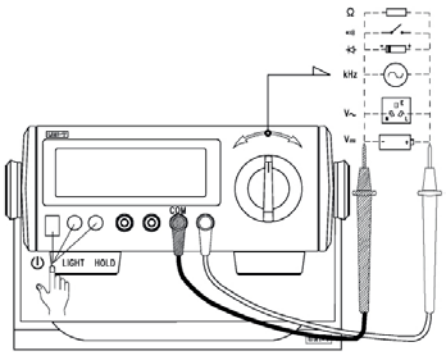

Diagram 2

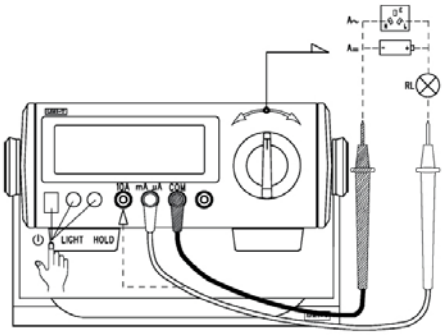

Diagram 3

Warning:

1. Selecting the correct terminal input and turns the rotary switch to select the measuring function. If fails to do that, the buzzer beep and the warning signal flash on.

Range	Alarm Alert On False Terminal Input
V Hz Ω	10A mAμA
mAμA ℃ hFE F	10A
10A	mAμA

2.DC or AC Voltage Measurement

- To avoid harms to you or damages to the Meter from electric shock, please do not attempt to measure voltages higher than 1000 V although reading may be obtained.
- The Meter has an input impedance of 10MΩ(exceptUT802/ACV input impedance of 2MΩ) This loading effect can cause measurement errors in high impedance circuits and so you need to take a note on it.

3.DC or AC Current Measurement

- Before connect the Meter in serial with the tested return circuit, closed
the return circuit current to avoid the dangerous of sparking.
- Do not use over >10A current measurement. Although the meter can work on below 20A current testing but for the avoiding any harms to you or damages to the Meter.

4.Measuring Resistance, Diodes, Continuity or Capacitance

- To maintain the measurement accuracy, discount circuit power and discharge all the high voltage capacitors during the measuring resistance.
- When measuring high resistance on 1MΩ or above, it is normal to take several seconds to obtain a stable reading. In order to obtain stable reading, choose shorter test lead to carrying out measurement.
- The test leads and the Meter inside wire will bring around 0.1Ω～0.2Ω of error to resistance measurement when measuring low resistance. To obtain accurate readings in low-resistance, short –circuit the test leads beforehand and record the reading obtained, call this reading as X. Then use the equation: measured resistance value (Y) – (X) = accurate readings of resistance.
- During measurement, Diodes is in a good silicon junction drops between 500mV～800mV as the normal value. The continuity measurement, the poles between resistance is >100Ω. it is a short circuit, but on the poles between resistance is ≤10Ω, it is a good connection, buzzer is continually beep on, and the reading value is nearly to the circuit resistance value, Unit is Ω.

Accuracy Specifications

Accuracy: ±(% reading + digits), guarantee for 1 year
Operating temperature: 18℃～28℃
Environmental humidity: Less than 75%RH

1. DC Voltage

Range	Resolution		Accuracy Tolerance:±(% Reading+Digits)	
	UT801	UT802	UT801	UT802
200mV	0.1mV	0.01mV	±(0.5%+2)	±(0.1%+5)
2V	1mV	0.1mV		±(0.1%+3)
20V	10mV	1mV		
200V	100mV	10mV		
1000V	1V	0.1V	±(0.8%+3)	±(0.2%+5)

Input Impedance: is average on 10MΩ
Maximum Voltage Input: 1000V (Except 200mV, 250V)

2. AC Voltage

Range	Resolution		Accuracy Tolerance:±(% Reading+Digits)	
	UT801	UT802	UT801	UT802
2V	1mV	0.1mV	±(0.8%+3)	±(0.5%+20)
20V	10mV	1mV	±(1.0%+4)	±(0.8%+40)
200V	100mV	10mV		
1000V	1V	0.1V		

Input Impedance: UT801 is average on 10MΩ , UT802 is about 2MΩ .
Maximum Voltage Input: 1000 Vrms
Frequency: 45Hz～400Hz
Display: True RMS

3. DC Current

Range	Resolution		Accuracy Tolerance:±(% Reading+Digits)	
	UT801	UT802	UT801	UT802
200μA	0.1μA	0.01μA	±(0.8%+2)	±(0.5%+20)
2mA	1μA	0.1μA		
20mA	10μA	1μA		
200mA	0.1mA	0.01mA		
10A	10mA	1mA	±(2.0%+4)	±(1.5%+40)

* When ≥5A, Continuous measurement less than 10 seconds at an interval more than 15 minutes.

4. AC Current

Range	Resolution		Accuracy Tolerance:±(% Reading+Digits)	
	UT801	UT802	UT801	UT802
2mA	1μA	0.1μA	±(1.0%+3)	±(0.8%+40)
20mA	10μA	1μA		
200mA	0.1mA	0.01mA		
10A	10mA	1mA	±(2.5%+5)	±(2.0%+40)

Frequency: 45Hz～400Hz
* When ≥5A, Continuous measurement less than 10 seconds at an interval more than 15 minutes.

5. Resistance

Range	Resolution		Accuracy Tolerance:±(% Reading+Digits)	
	UT801	UT802	UT801	UT802
200Ω	0.1Ω	0.01Ω	±(0.8%+3)	±(0.5%+10)
2kΩ	1Ω	0.1Ω		
20kΩ	10Ω	1Ω		
200kΩ	100Ω	10Ω		
2MΩ	1kΩ	100Ω		
20MΩ	10kΩ		±(1.5%+5)	
200MΩ		10kΩ		±(5%+40)

When >100MΩ resistance measurement as reference purpose.

6. Capacitance

Range	Resolution		Accuracy Tolerance:±(% Reading+Digits)	
	UT801	UT802	UT801	UT802
20nF	10pF	1pF	±(4%+3)	±(4%+10)
2μF	1nF	100pF		
200μF*	100nF	10nF	±(5%+5)	±5%+10)

*>40μF capacitance measurement as reference purpose.

7. Frequency

Range	Resolution		Accuracy Tolerance:±(% Reading+Digits)	
	UT801	UT802	UT801	UT802
2kHz	1Hz	0.1Hz	±(1.5%+5)	±(1.2%+10)
200kHz	100Hz	10Hz		

Input Amplitude a:
(2kHz range) 50mV≤a≤30Vrms
(200kHz range)150mV≤a≤30Vrms

8. Temperature

Range	Resolution		Accuracy Tolerance:±(% Reading+Digits)	
	UT801	UT802	UT801	UT802
-40～-20℃	1℃	0.1℃	-(8%+5)	-(8%+40)
>-20℃0℃			±(1.2%+4)	±(1.2%+30)
>0～100℃			±(1.2%+3)	±(1.2%+25)
>100～1000℃			±(2.5%+2)	±(2.5%+20)

* Thermocouple: It is suitable to use K type thermocouple. This include point contact K type thermocouple can only be used on less than 230℃ temperature measurement.

9. Diode Test

Range	Resolution		Remarks
	UT801	UT802	Open circuit voltage is around 3 V, Silicon junction drops between 0.5～0.8V as the normal value.
	1mV	0.1mV	

10. Continuity Test

Range	Resolution		Remarks
	UT801	UT802	Open circuit voltage is approximate 3V
	1Ω*	0.1Ω*	

When circuit disconnected with resistance value >100Ω, buzzer does not beep.
When circuit is in good connection with resistance value ≤10Ω, buzzer beeps continuously.

11. Transistor hFE

Range	Resolution		Remarks
hFE	UT801	UT802	Ib0 is about 10μA, Vce is about 2.5V
	1β*	0.1β*	

Replacing the battery(see Diagram 4)

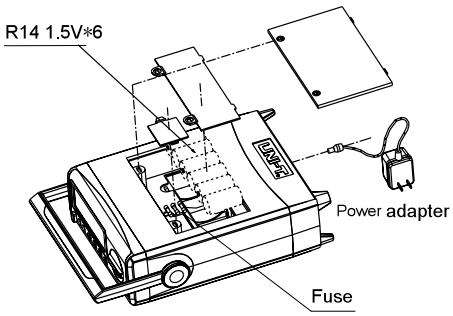

Diagram 4

Specifications and other information shown on this instruction manual are subject to change without notice

UNI-T
UNI-TREND TECHNOLOGY (CHINA) CO., LTD.
No6, Gong Ye Bei 1st Road,
Songshan Lake National High-Tech Industrial
Development Zone, Dongguan City,
Guangdong Province, China
Tel: (86-769) 8572 3888
http://www.uni-trend.com