UNI-T®

UT803

Operating Manual

True RMS Digital

Bench Type Multimeter

P/N:110401104465X
DATE:2018.06.26
REV.3

TABLE OF CONTENTS

TITLE **PAGE**

Overview — 3
Unpacking Inspection — 4
Safety Information — 5
Rules For Safe Operation — 6
International Electrical Symbols — 8
The Meter Structure — 9
Rotary Switch — 10
Functional Buttons — 11
Display Symbols — 12
Measurement Operation — 16
- A. DC or AC Voltage Measurement — 16
- B. DC or AC Current Measurement — 18
- C. Measuring Resistance — 20
- D. Testing for Continuity — 22
- E. Testing Diodes — 24
- F. Capacitance Measurement — 26
- G. Frequency Measurement — 28
- H. Temperature Measurement — 30
- I . Measuring Transistor — 32

Operation of Hold Mode — 33
The POWER Button — 33
The SELECT Button — 33
Turning on the Display Backlight — 34
The RANGE Button — 34
The MAX MIN Button — 35
AC/AC+DC Button — 35

TITLE	PAGE
POWER INPUT Switch	35
Sleep Mode	36
RS232 Button	36
General Specifications	37
Accuracy Specifications	38
A. DC Voltage	38
B. AC Voltage	39
C. DC Current	41
D. AC Current	42
E. Resistance	43
F. Continuity Test	44
G. Diode Test	44
H. Capacitance	45
I . Frequency	46
J. Temperature	47
K. Transistor	47
Maintenance	48
A. General Service	48
B. Replacing the Fuses	49
C. Replacing the Battery	51
RS232C and USB Serial Port	52
System Requirements for Installing the UT803 Interface Program	52
RS232C Serial Port	53
A. Connecting between the Meter and computer	53
B. RS232C Port Cable	54
C. Setting of RS232C Serial Ports	54
USB Serial Port	55
A. Connecting between the Meter and computer	55
B. Setting of USB Serial Ports	55

Overview

This Operating Manual covers information on safety and cautions. Please read the relevant information carefully and observe all the Warnings and Notes strictly.

⚠ **Warning**

To avoid electric shock or personal injury, read the "Safety Information" and "Rules for Safety Operation" carefully before using the Meter.

Digital Bench-Type True RMS Multimeter **Model UT803** (hereafter referred to as "the Meter") has autorange and manual range options with maximum reading 5999 and 3 5/6 digits which has a unique outlook design.

In addition to all the conventional features including DC/AC voltage, current, resistance, diode, continuity test, capacitance, temperature ^{0}C and ^{0}F, transistor, max/min, there is a data hold, low battery display, sleep mode, RS232C and USB standard serial port for easy connection with computer to realize macro recording and monitoring and capture of transient dynamic data, displaying change of waveform during the measurement, providing data and evidence to engineering technicians for scientific research.

This is also a highly applied digital multimeter of good performance with full overload protection and display backlight function.

Unpacking Inspection

Open the package case and take out the Meter. Check the following items carefully to see any missing or damaged part:

Item	Description	Qty
1	Operating Manual	1 piece
2	Installation guide and computer interface software (CD-ROM)	1 piece
3	Power Cord (AC 110V)	1 piece
4	Alligator Clip	1 pair
5	Multi-Purpose Socket	1 piece
6	Point Contact Temperature Probe (to be used under 230°C temperature measurement)	1 piece
7	Test Lead	1 pair
8	RS232C Interface Cable	1 piece
9	USB Interface Cable	1 piece

ATTENTION:
Accessories Item 4 to 9（english manual figure 13- page 51） are stored in the back of the machine.
In the event you find any missing or damage, please contact your dealer immediately.

Safety Information

This Meter complies with the standards IEC61010: in pollution degree 2, overvoltage category (CAT. I 1000V, CAT.II 600V) and double insulation.

CAT III: Distribution level, fixed installation, with smaller transient overvoltages than CAT. IV
CAT IV: Primary supply level, overhead lines, cable systems etc.

Use the Meter only as specified in this operating manual, otherwise the protection provided by the Meter may be impaired.
In this manual, a **Warning** identifies conditions and actions that pose hazards to the user, or may damage the Meter or the equipment under test.

A **Note** identifies the information that user should pay attention on.

International electrical symbols used on the Meter and in this Operating Manual are explained on page 8.

Rules For Safe Operation

⚠ **Warning**

To avoid possible electric shock or personal injury, and to avoid possible damage to the Meter or to the equipment under test, adhere to the following rules:

- Before using the Meter inspect the case. Do not use the Meter if it is damaged or the case (or part of the case) is removed. Look for cracks or missing plastic. Pay attention to the insulation around the connectors.
- Inspect the test leads for damaged insulation or exposed metal. Check the test leads for continuity. Replace damaged test leads with identical model number or electrical specifications before using the Meter.
- Do not apply more than the rated voltage, as marked on the Meter, between the terminals or between any terminal and grounding.
- The rotary switch should be placed in the right position and no any changeover of range shall be made during measurement is conducted to prevent damage of the Meter.
- When the Meter working at an effective voltage over 60V in DC or 30V rms in AC, special care should be taken for there is danger of electric shock.
- Use the proper terminals, function, and range for your measurements.
- If the value to be measured is unknown, use the maximum measurement position and reduce the range step by step until a satisfactory reading is obtained.
- Do not use or store the Meter in an environment of high temperature, humidity, explosive, inflammable and strong magnetic field. The performance of the Meter may deteriorate after dampened.
- When using the test leads, keep your fingers behind the finger guards.
- Disconnect circuit power and discharge all high-voltage capacitors before testing resistance, continuity, diodes, current, or capacitance.
- Before measuring current, check the Meter's fuses and turn off power to the circuit before connecting the Meter to the circuit.

- Replace the battery as soon as the battery indicator appears. With a low battery, the Meter might produce false readings that can lead to electric shock and personal injury.
- Remove test leads, temperature probe, RS232C interface cable, USB interface cable and alligator clip from the Meter and turn the Meter power off before opening the Meter case.
- When servicing the Meter, use only the same model number or identical electrical specifications replacement parts.
- The internal circuit of the Meter shall not be altered at will to avoid damage of the Meter and any accident.
- Soft cloth and mild detergent should be used to clean the surface of the Meter when servicing. No abrasive and solvent should be used to prevent the surface of the Meter from corrosion, damage and accident.
- The Meter is suitable for indoor use.
- Turn the Meter power off when it is not in use.
- Take out the battery when not using for a long time if using battery to power on the Meter.
- When using battery to power on the Meter, constantly check the battery as it may lead when it has been using for some time, replace the battery as soon as leaking appears. A leaking battery will damage the Meter.

International Electrical Symbols

≂	AC or DC
⏚	Grounding
⧈	Double Insulated
⚠	Warning. Refer to the Operating Manual
	Deficiency of Built-In Battery
•)))	Continuity Test
	Diode
	Capacitance Test
	Fuse
CE	Conforms to Standards of European Union

The Meter Structure (see figure 1)

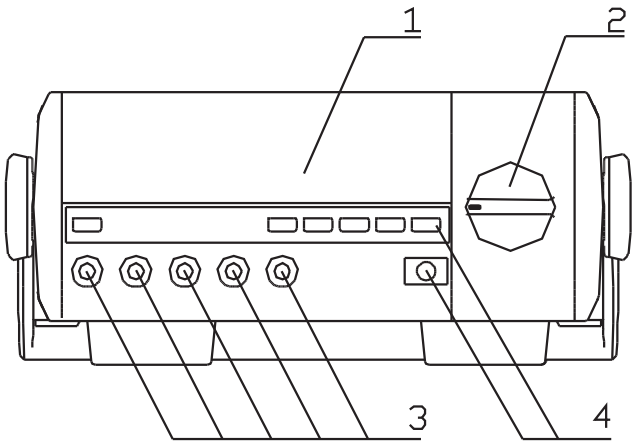

(Figure 1)

1. LCD Display
2. Rotary Switch
3. Input Terminals
4. Functional Buttons

Rotary Switch

Below table indicated for information about the rotary switch positions:

Rotary Switch Position	Function
V≂	AC and DC voltage measurement
•))) ⊣▶⊢ Ω	•))) :Continuity test.
	⊣▶⊢ :Diode test.
	Ω :Resistance measurement.
⊣⊢	Capacitance test
Hz	Hz :Frequency measurement.
°F	°F :Temperature in Fahrenheit
°C	Temperature in celsius
hFE	Transistor test
µA≂	AC or DC current measurement range from 0.1uA to 5999uA.
mA≂	AC or DC current measurement range from 0.01mA to 599.9mA.
A≂	AC or DC current measurement range from 0.01A to 10.00A.

Functional Buttons

Below table indicated for information about the functional button operations.

Button	Operation Performed
POWER	Turn the power on and off.
LIGHT	Turn the display backlight on and off.
SELECT	l Switches between AC and DC measurement. l Switches between continuity and diode and resistance measurements l Switches between frequency and Fahrenheit temperature.
HOLD	Press **HOLD** to enter and exit the Hold mode in any mode, the Meter beeps.
RANGE	Press **RANGE** to switch between manual and auto ranging.
RS232C	Turn on or off the serial port interface without changing the original setting.
MAX MIN	Starts recording of maximum and minimum values. Steps the display through high (MAX) and low (MIN).
AC AC+DC	To select AC or AC+DC measurement.

Display Symbols (see figure 2)

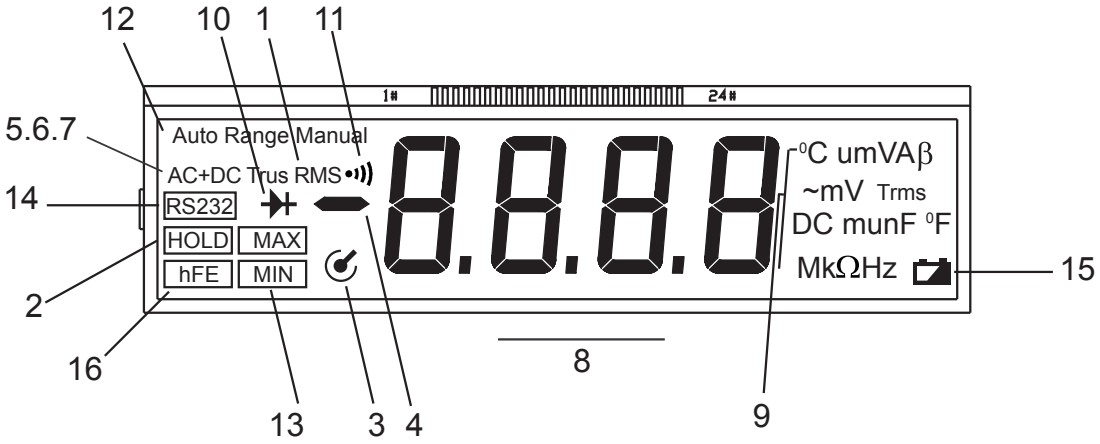

(Figure 2)

Number	Symbol	Meaning
1	**True RMS**	Indicator for true rms value.
2	**HOLD**	Data hold is active.
3		Sleep Mode feature is enabled.
4		Indicates negative reading.
5	**AC**	Indicator for AC voltage or current.
6	**DC**	Indicator for DC voltage or current
7	**AC+DC**	Indicator for AC+DC measurement
8	**OL**	The input value is too large for the selected range.
9	**Ω,KΩ,MΩ**	Ω :Ohm. The unit of resistance.
		KΩ :kilohm. 1 x 10^3 or 1000 ohms.
		MΩ :Megaohm.1x10^6 or 1,000,000 ohms.
	A, mA, µA	A :Amperes (amps).The unit of current.
		mA:Milliamp. 1 x 10^{-3} or 0.001 amperes.
		µA : Microamp. 1x 10^{-6} or 0.000001 amperes.

Number	Symbol	Meaning
9	**V, mV**	V : Volts. The unit of voltage.
		mV: Millivolt.1 x 10^{-3} or 0.001 volts.
	F, mF, µF,nF	F : Farad.The unit of capacitance.
		mF: Millifarad.1 x 10^{-3} or 0.001 farads
		µF : Microfarad.1x10^{-6} or 0.000001 farads.
		nF : Nanofarad.1 x 10^{-9} or 0.000000001 farads.
	^{0}C, ^{0}F	Centigrade temperature
		Temperature in Fahrenheit
	Hz, kHz, MHz	Hz : Hertz. The unit of frequency in cycles/second.
		kHz : Kilohertz. 1 x 10^3 or 1,000 hertz.
		MHz: Megahertz. 1 x 10^6 or 1,000,000 hertz.
	β	Unit of transistor.
10	⊣▶⊢	Test of diode
11	•ı))	The continuity buzzer is on.

Number	Symbol	Meaning
12	**AutoRange** **Manual**	Indicator of Auto or manual range
13	MAX MIN	Display of maximum or minimum value.
14	RS232	Data output is in progress.
15		The battery is low. ⚠Warning: To avoid false readings, which could lead to possible electric shock or personal injury, replace the battery as soon as the battery indicator appears.
16	hFE	Transistor test is on

Measurement Operation

A. DC or AC Voltage Measurement (See figure 3)

⚠ **Warning**
To avoid harms to you or damages to the Meter from electric shock, please do not attempt to measure voltages higher than 1000V although readings may be obtained.

To measure DC/AC voltage, connect the Meter as follows:

1. Insert the red test lead into the **V** terminal and the black test lead into the **COM** terminal. If the measured value is less than 600mV, insert the red test lead into **mV** terminal instead and press **RANGE** button to select manual range 600.0mV mode, the LCD displays "**MANUAL**" and "**mV**".
2. Set the rotary switch to **V⎓** ; press **SELECT** button to select DC or AC measurement mode.
3. Connect the test leads across with the object being measured. The measured value shows on the display. AC measurement displays True RMS value.

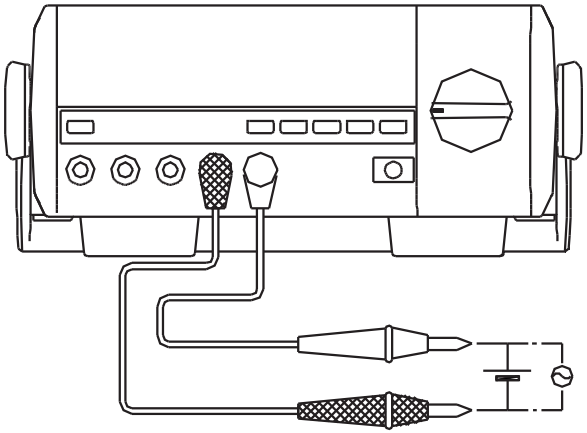

(Figure 3)

4. Press **AC/AC+DC** button to measure AC+DC voltage's true RMS.

Note

- In each range, the Meter has an input impedance of 10MΩ except 600mV range has 3000MΩ. This loading effect can cause measurement errors in high impedance circuits. If the circuit impedance is less than or equal to 10kΩ, the error is negligible (0.1% or less).
- When DC/AC voltage measurement has been completed, disconnect the connection between the testing leads and the circuit under test, and remove the testing leads away from the input terminals of the Meter.

B. DC or AC Current Measurement (See figure 4)

⚠ **Warning**

Before connect the Meter in serial with the tested return circuit, close the return circuit's current to avoid the dangerous of sparking.

If the fuse burns out during measurement, the Meter may be damaged or the operator himself may be hurt. Use proper terminals, function, and range for the measurement. When the testing leads are connected to the current terminals, do not parallel them across any circuit.

To measure current, do the following:

1. Insert the red test lead into the **µA mA** terminal and the black test lead into the **COM** terminal.
2. Set the rotary switch to an appropriate measurement position in **µA**⎓, **mA**⎓ or **A**⎓, press **SELECT** button to select AC or DC measurement mode.
3. Connect the test leads in serial with the object being measured. The measured value shows on the display. AC measurement displays True RMS value.
4. Press **AC/AC+DC** button to measure AC+DC current's true RMS

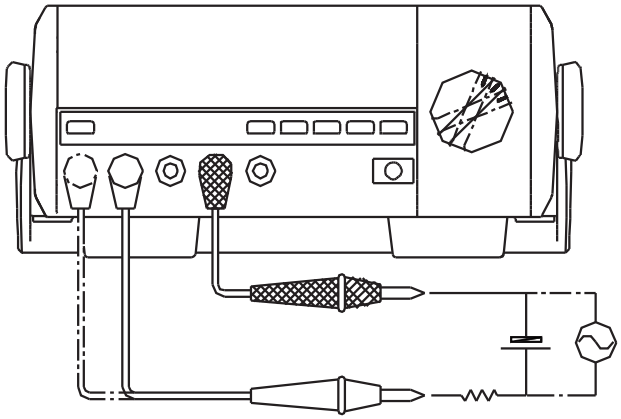

(Figure 4)

Note

- If the value of current to be measured is unknown, use the maximum measurement position, and reduce the range step by step until a satisfactory reading is obtained.
- For safety sake, each measurement time of high current (>5A) should be less than 10 seconds and the interval time between 2 measurements should be greater than 15 minutes.
- When current measurement has been completed, disconnect the connection between the testing leads and the circuit under test, and remove the testing leads away from the input terminals of the Meter.

C. Measuring Resistance (see figure 5)

⚠ **Warning**

To avoid damages to the Meter or to the devices under test, disconnect circuit power and discharge all the high-voltage capacitors before measuring resistance. To avoid harms to you, please do not attempt to input voltages higher than 60V DC or 30V AC.

To measure resistance, connect the Meter as follows:

1 .Insert the red test lead into the Ω terminal and the black test lead into the **COM** terminal.

2 .Set the rotary switch to Ω •ıı) ⊣⊢, press **SELECT** button to select Ω measurement mode.

3 .Connect the test leads across with the object being measured. The measured value shows on the display.

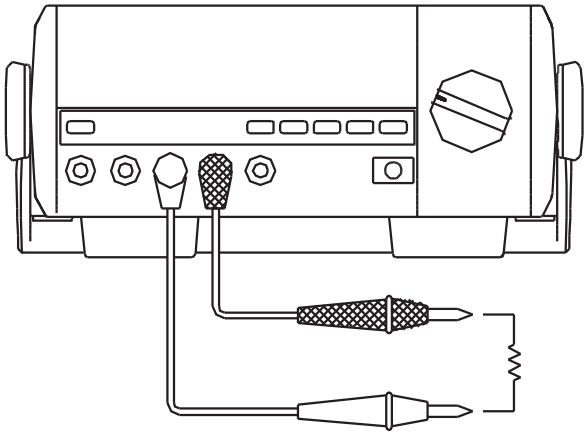

(Figure 5)

Note

- The test leads and the Meter inside wire will bring around 0.2Ω to 0.5Ω of error to resistance measurement when measuring low resistance. To obtain accurate readings in low-resistance, short-circuit the test lead beforehand and record the reading obtained, call this reading as X. Then use the equation: measured resistance value (Y) – (X) = accurate readings of resistance.
- If Ω reading with shorted test leads is not < 0.5Ω, check for loose test leads, incorrect function selection, or any other reasons.
- When measuring high resistance (>1MΩ), it is normal to take several seconds to obtain a stable reading. In order to obtain stable reading, choose shorter test lead to carrying out measurement.
- The LCD displays **OL** indicating open-circuit for the tested resistor or the resistor value is higher than the maximum range of the Meter.
- When resistance measurement has been completed, disconnect the connection between the testing leads and the circuit under test, and remove the testing leads away from the input terminals of the Meter.

D. Testing for Continuity (See figure 6)

⚠ **Warning**

To avoid damages to the Meter or to the devices under test, disconnect circuit power and discharge all the high-voltage capacitors before testing for continuity. To avoid harms to you, please do not attempt to input voltages higher than 60V DC or 30V AC.

To test for continuity, connect the Meter as below:

1. Insert the red test lead into the Ω terminal and the black test lead into the **COM** terminal.
2. Set the rotary switch to Ω •ıı) ⊣⊢ and press **SELECT** button to select •ıı) measurement mode.
3. Connect the test lead across with the object being measured. The buzzer sounds if the resistance of a circuit under test is < 10Ω, the circuit is in good condition. The buzzer does not sound if the resistance of a circuit under test is >30Ω, the circuit is broken.
4. The measured value shows on the display and the unit is Ω.

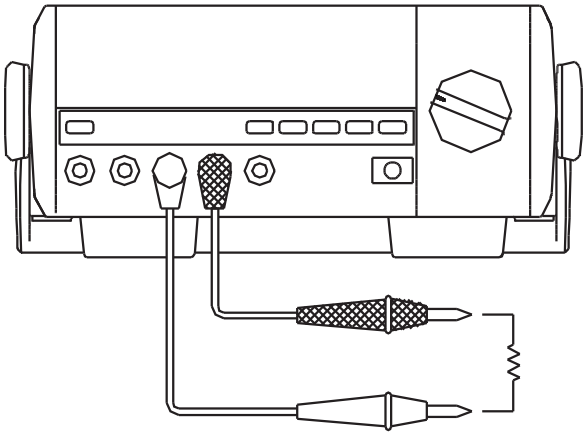

(Figure 6)

Note

- Open circuit voltage around -1.2V and range is 600Ω.
- When continuity testing has been completed, disconnect the connection between the testing leads and the circuit under test, and remove the testing leads away from the input terminals of the Meter.

E. Testing Diodes (See figure 7)

⚠ **Warning**

To avoid possible damage to the Meter and to the device under test, disconnect circuit power and discharge all high-voltage capacitors before testing diodes.

To avoid harms to you, please do not attempt to input voltages higher than 60V DC or 30V AC.

Use the diode test to check diodes, transistors, and other semiconductor devices. The diode test sends a current through the semiconductor junction, and then measures the voltage drop across the junction. A good silicon junction drops between 0.5V and 0.8V.

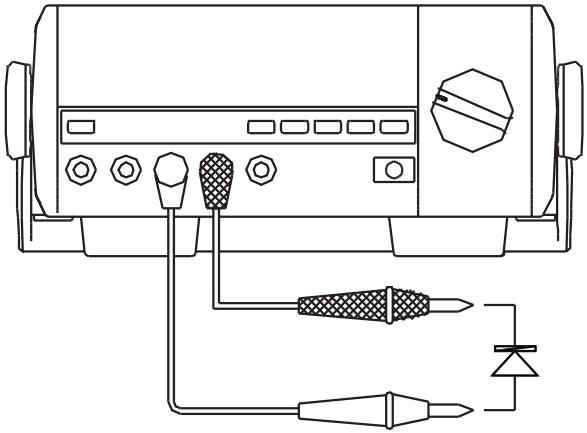

(Figure 7)

To test a diode out of a circuit, connect the Meter as follows:

1. Insert the red test lead into Ω terminal and the black test lead into the **COM** terminal.
2. Set the rotary switch to Ω •ıı) ⊣⊢ and press **SELECT** button to select ⊣⊢ measurement mode.
3. For forward voltage drop readings on any semiconductor component, place the red test lead on the component's anode and place the black test lead on the component's cathode. The measured value shows on the display.

Note

- Connect the test leads to the proper terminals as said above to avoid error display. The LCD will display **OL** indicating diode being tested is open or polarity is reversed. The unit of diode is Volt (V), displaying the forward voltage drop readings.
- Open circuit voltage is around 2.7V.
- When diode testing has been completed, disconnect the connection between the testing leads and the circuit under test, and remove the testing leads away from the input terminals of the Meter.

F. Capacitance Measurement (See figure 8)

⚠ **Warning**

To avoid damage to the Meter or to the equipment under test, disconnect circuit power and discharge all high-voltage capacitors before measuring capacitance. Use the DC Voltage function to confirm that the capacitor is discharged.

To measure capacitance, connect the Meter as follows:

1. Insert the red test lead into the **HzΩmV** terminal and the black test lead into the **COM** terminal.
2. Set the rotary switch to ⊣⊢ .
3. Connect the test leads across with the object being measured. The measured value shows on the display.

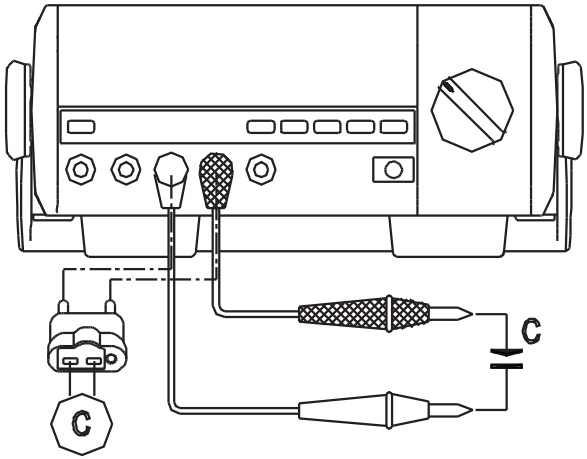

(Figure 8)

Note

- The Meter displays a fixed value which is the distributed capacitor's value of the inside Meter. To ensure accuracy, it is necessary to subtract this value from the measured value when measuring small capacitor.
- Multi-purpose socket can be used instead of testing leads. Insert the capacitor being tested into the corresponding input terminal of the multi-purpose socket. When measuring small capacitor value, more accurate value can be obtained using multi-purpose socket.
- It is normal to take a longer time when testing a capacitor value higher than 600μF.
- The LCD displays **OL** indicating the tested capacitor is shorted or it exceeds the maximum range.
- When capacitance measurement has been completed, disconnect the connection between the testing leads and the circuit under test and remove the testing leads away from the input terminals of the Meter.

G. Frequency Measurement (see figure 9)

⚠ **Warning**

To avoid harms to you, please do not attempt to input tested frequency's voltages higher than 30V rms.

To measure frequency, connect the Meter as follows:

1. Insert the red test lead into the **Hz** terminal and the black test lead into the **COM** terminal.
2. Set the rotary switch to **Hz**^{0}**F** and press **SELECT** button to select **Hz** measurement mode.
3. Connect the test leads across with the object being measured. The measured value shows on the display.

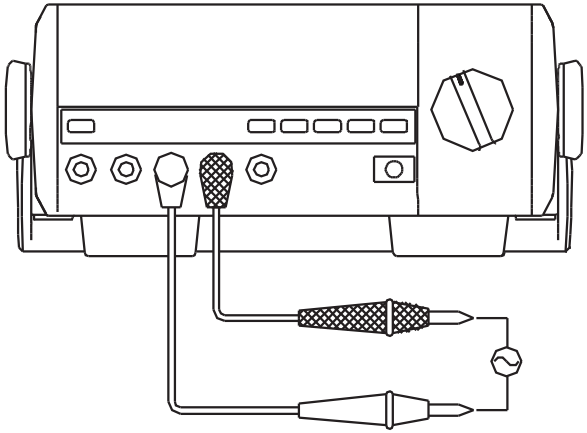

(Figure 9)

Note

- When making frequency measurement, it must comply with the following scope (a) requirement:
  When 10Hz ~ 1Mz :150mV ≤ a ≤ 30V rms
  When > 1Mz~ 10MHz :300mV ≤ a ≤ 30V rms
  When > 10Mz~ 50MHz :600mV ≤ a ≤ 30V rms
  When > 50Mz :Unspecified
- When frequency measurement has been completed, disconnect the connection between the testing leads and the circuit under test, and remove the testing leads away from the input terminals of the Meter.

H. Temperature Measurement (see figure 10)

⚠ **Warning**

To avoid harms to you, please do not attempt to input voltages higher than 60V DC or 30V AC.

To measure temperature, connect the Meter as follows:

1. Set the rotary switch to ^{0}**C** to measure degree celsius temperature or **Hz**^{0}**F** and press **SELECT** button to select ^{0}**F** measurement mode to measure Fahrenheit temperature.
2. Insert the multi-purpose socket into the corresponding **Hz** and **COM** terminal.
3. Insert the temperature probe to the corresponding input terminal of the multi-purpose socket.
4. Place the temperature probe to the object being measured. The measured value shows on the display after few seconds.

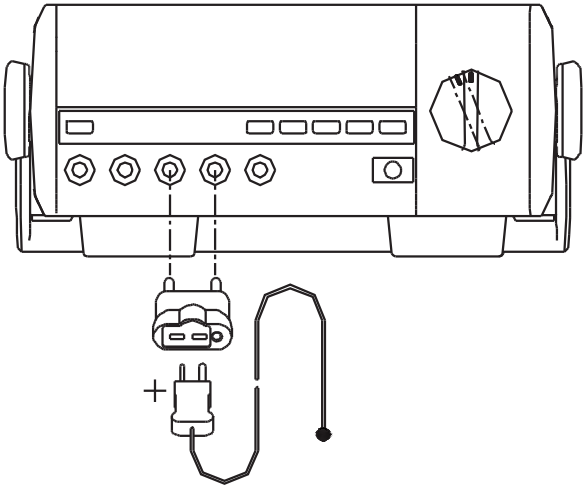

(Figure 10)

Note

- The testing environment must between 18^0C to 28^0C to ensure accuracy especially when measuring low temperature.
- Different reading may be obtained when testing room environment under short or open circuit situation, then short-circuited reading shall be considered as the correct reading.
- The included point contact temperature probe can only be used under 230^0C. For any measurement higher than that, the rod type temperature probe must be used instead.
- When temperature measurement has been completed, disconnect the connection between the temperature probe, multi-purpose socket and the circuit under test, and remove the temperature probe away from the input terminals of the multi-purpose socket, and remove the multi-purpose socket away from the input terminals of the Meter.

I. Measuring Transistor (see figure 11)

⚠ **Warning**

To avoid harms to you, please do not attempt to input voltages higher than 60V DC or 30V AC.

To measure transistor, connect the Meter as follows:

1. Insert the multi-purpose socket into the **μAmA** and **Hz** input terminal.
2. Set the rotary switch to **hFE**.
3. Insert the NPN or PNP type transistor to be tested into the corresponding input terminals of the multi-purpose socket.
4. The measured nearest transistor value shows on the display.

Note

1 When transistor measeurement has been completed, remove the tested transistor from the multi-purpose socket and remove the multi-purpose scoket from the input terminal

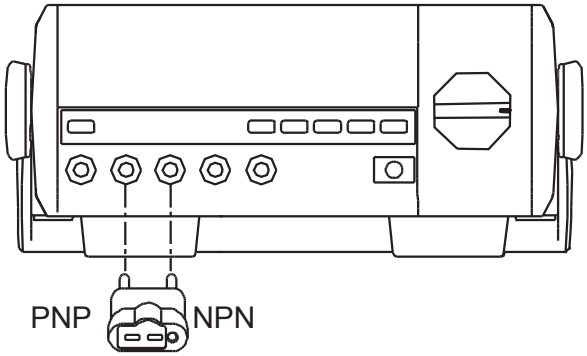

(Figure 11)

Operation of Hold Mode

⚠ **Warning**

To avoid possibility of electric shock, do not use Hold mode to determine if circuits are without power. The Hold mode will not capture unstable or noisy readings.

The Hold mode is applicable to all measurement functions.

- Press **HOLD** to enter Hold mode.
- Press **HOLD** again to exit Hold mode and the Meter displays the present measurement value.
- In Hold mode, **H** is displayed.

The POWER Button

This is a self-lock switch uses to turn on or off the power of the Meter. It is located at the tail of the Meter. "I" means power up the Meter while "O" means power off the Meter.

The SELECT Button

It uses for selecting the required measurement function when there is more than one function at one position of the rotary switch.

Turning on the Display Backlight

⚠ **Warning**

In order to avoid the hazard arising from mistaken readings in insufficient light or poor vision, please use Display Backlight function.

- Press **LIGHT** button to turn the Display Backlight on.
- Press **LIGHT** button again to turn the Display Backlight off, otherwise it will stay on continuously.
- When using the AC power to turn the Meter on, the Display Backlight always stays on.

The RANGE Button

- Press **RANGE** to enter the manual ranging mode; the Meter beeps.
- Press and hold **RANGE** for over 1 second to return to autoranging; the Meter beeps.

The MAX MIN Button

MAX MIN recording mode captures and stores the maximum and minimum input value detected.

To use the MAX MIN mode as follows:

- Press **MAX MIN** to display the highest reading (**MAX** is shown on display).
- Press **MAX MIN** again to display the lowest reading (**MIN** is shown on display).
  Press and hold **MAX MIN** for over 1 second to exit the MAX MIN mode.

AC/AC+DC Button

It is used to select measuring AC or AC+DC when measuring AC. Press it only at the AC voltage or current measuring mode which is at the rotary switch position **V≂**, **mV≂** ,**μA≂**, **mA≂** or **A≂**. "**+DC** " will be displayed when it is pressed under DC measurement mode.

POWER INPUT Switch

It is used to select AC 110V/50Hz or DC 6pcs of 1.5V battery (R14) to power on the Meter. It is located at the tail of the Meter.

Sleep Mode

When the Meter display symbol, it automatically turns off if you do not turn the rotary switch or press any button for around 10 minutes to preserve battery. The last measurement value will be kept.

The Meter can be activated by pressing the **POWER** button off and then on or pressing the **HOLD** button, it will display the last measurement value before it entered sleep mode and under the HOLD mode.
Turning the rotary switch can also activate the Meter. However, it will start from the switch selected function and it will not display the last measurement value before it entered sleep mode.

To disable the Sleep Mode function, press **MAX MIN**, **RANGE**, or **RS232** button while turning on the Meter, the symbol disappears.

RS232 Button

Press **RS232** button to enter or exit data output mode. In RS232C serial port data output mode, the Hold and Max Min mode cannot output to the computer, the computer will only display the present measuring value. In RS232C serial port data output mode, Sleep Mode function will be disabled, symbol disappears. **+DC**, **hFE** and β cannot output to the computer.

General Specifications

- Maximum Voltage between any Terminals and Grounding:
  Refer to different range input protection voltage.
- ⚠Fused Protection for **HzΩmV** Input Terminal: 200mA, 250V, fast type, ϕ5x20mm (only apply on hFE functions)
- ⚠Fused Protection for **μAmA** Input Terminal: 500mA, 125V, fast type, ϕ5x20mm.
- ⚠Fused Protection for **10A** Input Terminal: 10A, 250V, fast type, ϕ5x20mm.
- ⚠Fused Protection for AC110V Terminal: 500mA, 125V, fast type, ϕ5x20mm.
  At AC110V power: without fuse protection.
- Maximum Display : Digital: 5999
- Measurement Speed: Updates 2-3 times/second.
- Range : Manual or auto ranging.
- Polarity Display : Auto
- Overloading Display : OL
- Temperature:
  Operating: 0^0C to +40^0C (32^0F to +104^0F).
  Storage : -10^0C to +50^0C (14^0F to +122^0F).
- Relative Humidity:
  ≤75% @ 0^0C - 30^0C below; ≤50% @ 30 - 40^0C.
- Altitude:
  Operating: 2000 m.
  Storage : 10000 m.
- Below 1V/m electrostatic discharge:
  Accuracy = specified accuracy + 5% of the range.
  Over 1V/m electrostatic discharge:Without specified accuracy.
- Power:
  AC110V/50Hz or 6 pieces of 1.5V battery (R14).
- Battery Deficiency:
  Display
- Dimensions (HxWxL):
  105 x 240 x 310 mm.
- Weight:
  Approximate 2kg (accessories excluded).
- Safety/Compliances:
  IEC61010 CAT. I 1000V, CAT. II 600V overvoltage and double insulation standard.
- Certifications:
  CE, UL pending.

Accuracy Specifications

Accuracy: ±(a% reading + b digits),guarantee for 1 year.
Operating temperature: 23^{0}C ± 5^{0}C.
Relative humidity: not more than 75% RH.
Temperature coefficient: 0.1 x (specified accuracy)/1^{0}C.

A. DC Voltage

Range	Resolution	Accuracy	Overload Protection
600mV	0.1mV	±(0.6%+2)	1000V
6V	0.001V	±(0.3%+2)	
60V	0.01V		
600V	0.1V		
1000V	1V	±(0.5%+3)	

Remarks:

1 **Input Impedance:**

At 600mV range : Around > 3000MΩ.

At all other ranges: Around 10MΩ.

B. AC Voltage

Range	Resolution	Accuracy	Overload Protection
600mV	0.1mV	40Hz-50kHz: ±(0.6%+5)	1000V
		>50kHZ-100kHz: ±(1%+5)	
6V	0.001V	40Hz-1kHz: ±(0.6%+5)	
		>1kHz-10kHz: ±(1.0%+5)	
		>10kHz-100kHz: ±(3%+5)	
60V	0.01V	40Hz-1kHz: ±(0.6%+5)	
		>1kHz-10kHz: ±(1.5%+5)	
		>10kHz-20kHz: ±(3%+5)	
		>20kHz-100kHz: ±(8%+5)	
600V	0.1V	40Hz-1kHz: ±(0.6%+5)	
		>1kHz-10kHz: ±(3.5%+5)	
1000V	1V	40Hz-1kHz: ±(1.2%+3)	
		>1kHz-3kHz: ±(3%+3)	

Remarks:

- **Input Impedance:**
  At 600mV range : Around > 3000MΩ
  At all other ranges: Around 10MΩ
- **Displays:**
  - True RMS (applicable to the range of 10%~95%)
  - At 1000V range: AC peak factor 1.5.
    All other ranges: AC peak factor 3.0.
  - Input short circuit has around less than 30 remaining digits, it will not affect accuracy.
  - AC+DC measurement accuracy = range's accuracy + 1%

C. DC Current

Range	Resolution	Accuracy	Overload Protection
600μA	0.1μA	±(0.5%+3)	Fuse 500mA, 125V, fast type, ϕ5x20mm.
6000μA	1μA		
60mA	0.01mA		
600mA	0.1mA	±(0.8%+3)	
10A	10mA	±(1.2%+3)	Fuse 10A, 250V, fast type, ϕ5x20mm.

Remarks:

- **At ≤ 5A range**: Continuous measurement is allowed.
- **At >5A range**: For continuous measurement ≤10 seconds and interval not less than 15 minutes.

D. AC Current

Range	Resolution	Accuracy	Overload Protection
600μA	0.1μA	40Hz~10kHz: ±(1.0%+5) >10kHz~15kHz: ±(2%+5)	Fuse 500mA, 125V, fast type,ϕ5x20mm.
6000μA	1μA		
60mA	0.01mA		
600mA	0.1mA	40Hz~10kHz: ±(1%+5) >10kHz~15kHz: ±(3%+5)	
10A	10mA	40Hz~5kHz: ±(2.0%+6)	Fuse 10A,250V, fast type, ϕ5x20mm.

Remarks:

- **At ≤ 5A range**: Continuous measurement is allowed.
- **At >5A range** : For continuous measurement ≤10 seconds and interval not less than 15 minutes.
- **Displays:**
  - True RMS (applicable to the range of 10%~95%)
  - AC peak factor 3.0.
  - Input short circuit has around less than 30 remaining digits, it will not affect accuracy.
  - AC+DC measurement accuracy = range's accuracy + 1%

E. Resistance

Range	Resolution	Accuracy	Overload Protection
600Ω	0.1Ω	±(0.8%+3) + test lead short circuit resistance value	250V rms
6kΩ	0.001kΩ	±(0.5%+2)	
60kΩ	0.01kΩ		
600kΩ	0.1kΩ		
6MΩ	0.001MΩ	±(0.8%+2)	
60MΩ	0.01MΩ	±(1.2%+3)	

F. Continuity Test

Range	Resolution	Overload Protection	Remarks
•ı))	1Ω	250V rms	l Open circuit voltage approximate -1.2V. l When circuit disconnected with resistance value > 30Ω, buzzer does not beep. l When circuit is in good connection with resistance value ≤ 10Ω buzzer beeps continuously.

G. Diode Testst

Range	Resolution	Overload Protection	Remarks
⊣▶⊢	10mV	250V rms	l Open circuit voltage approximate 2.7V. l Working current approximate 1mA.

H. Capacitance

Range	Resolution	Accuracy	Overload Protection
6nF	0.001nF	±(2.5%+5)	250V rms
60nF	0.01nF		
600nF	0.1nF	±(2%+5)	
6μF	0.001μF		
60μF	0.01μF		
600μF	0.1μF	±(3%+4)	
6mF	0.001mF	±(5%+4)	

Remarks:

1 At 6nF, 60nF and 600nF Range: reading must subtract the test lead open circuit capacitance value.

I. Frequency

Range	Resolution	Accuracy	Overload Protection
6kHz	0.001kHz	±(0.1%+3)	250V rms
60kHz	0.01kHz		
600kHz	0.1kHz		
6MHz	0.001MHz		
60MHz	0.01MHz		

Remarks:

1 **Input scope (a)**: (DC electric level is zero)
When 10Hz ~ 1MHz : 150mV ≤ a ≤ 30V rms
When > 1MHz ~ 10MHz : 300mV ≤ a ≤ 30V rms
When > 10MHz ~ 50MHz : 600mV ≤ a ≤ 30V rms
When > 50MHz : Unspecified

J. Temperature

Range	Resolution	Accuracy		Overload Protection
^{0}C	1^{0}C	-40^{0}C~0^{0}C	±(8%+5)	250V rms
		>0^{0}C~400^{0}C	±(1%+3)	
		>400^{0}C~1000^{0}C	±(1.5%+3)	
^{0}F	1^{0}F	-40^{0}C~32^{0}C	±(8%+5)	
		>32^{0}F~752^{0}F	±(1.5%+5)	
		>752^{0}F~1832^{0}F	±(2.5%+5)	

Remarks:

1 The included point contact temperature probe can only be used to measure under 230^{0}C temperature. For any measurement higher than that, the rod type temperature probe must be used instead.

K. Transistor

Range	Resolution	Overload Protection	Remarks
hFE	1β	1 Fuse 200mA, 250V, fast type, ϕ5x20mm. 1 Fuse 500mA, 125V, fast type, ϕ5x20mm	Vce ≈ 2.2V bo ≈ 10μA 1000β MAX

Maintenance

This section provides basic maintenance information including battery and fuse replacement instruction.

⚠ **Warning**

Do not attempt to repair or service your Meter unless you are qualified to do so and have the relevant calibration, performance test, and service information. To avoid electrical shock or damage to the Meter, do you get water inside the case.

A. General Service

- Periodically wipe the case with a damp cloth and mild detergent. Do not use abrasives or solvents.
- To clean the terminals with cotton bar with detergent, as dirt or moisture in the terminals can affect readings.
- Turn off the power of the Meter when it is not in use.
- Take out the battery when it is using for a long time.
- Do not use or store the Meter in a place of humidity, high temperature, explosive, inflammable and strong magnetic field.

B. Replacing the Fuses (see figure 12)

⚠ **Warning**

To avoid electrical shock or arc blast, or personal injury or damage to the Meter, use specified fuses ONLY in accordance with the following procedure.

To replace the Meter's fuse:

1. Press the **POWER** to turn the Meter off, disconnect the power cord and remove all connections from the terminals.
2. Fuse 1: Remove the screws from the power socket at the rear of the Meter. Remove the fuse by gently prying one end loose, then take out the fuse from its bracket. Then install the replacement fuse.
   Fuse 2 and 3: Use a coin to open the accessories compartment at the top of the front cover, then you will see a fuse compartment. Open the fuse compartment to replace fuse 2 and 3. Remove the fuse by gently prying one end loose, then take out the fuse from its bracket.
   Then install the replacement fuse.

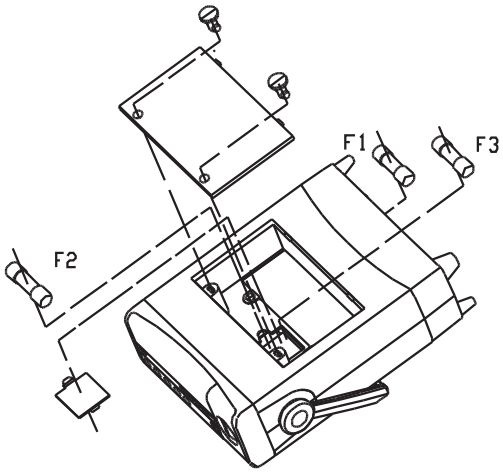

(Figure 12)

Fuse 4:It is located at the PCB. Remove the fuse by gently prying one end loose, then take out the fuse from its bracket. Then install the replacement fuse

3. Install ONLY replacement fuses with the identical type and specification as follows and make sure the fuse is fixed firmly in the bracket.
   Fuse 1: 500mA, 125V, fast type, ϕ5x20mm (AC110V)
   Fuse 2: 10A, 250V, fast type, ϕ5x20 mm (A)
   Fuse 3: 500mA, 125V, fast type, ϕ5x20 mm (μA, mA)
   Fuse 4: 200mA, 250V, fast type, ϕ5x20 mm (hFE)

Replacement of the fuses is seldom required. Burning of a fuse always results from improper operation.

C. Replacing the Battery (see figure 13)

⚠ **Warning**

To avoid false readings, which could lead to possible electric shock or personal injury, replace the battery as soon as the battery indicator " ▭ " appears when using battery to power on the Meter.

To replace the battery:

1. Press the **POWER** to turn the Meter off and remove all connections from the terminals.
2. Use a coin to open the accessories compartment at the top of the front case.
3. Use a coin to open the battery compartment inside the accessories compartment located at the top of he front case.
4. Remove all the batteries from the battery compartment.
5. Replace the battery with new 6pcs of 1.5V battery (R14).
6. Rejoin the battery compartment and also the accessories compartment located at the top of the front case.

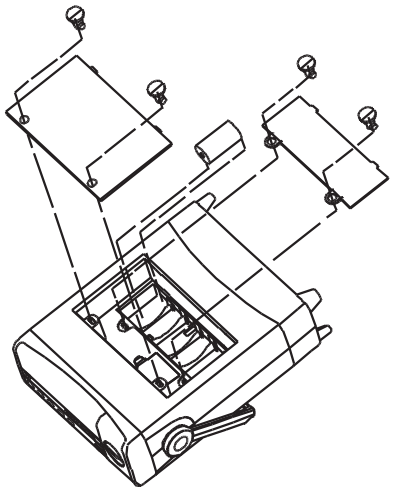

(Figure 13)

RS232C and USB Serial Port

System Requirements for Installing the UT803 Interface Program

To use UT803 Interface Program, you need the following hardware and software:

- An IBM PC or equivalent computer with 80486 or higher processor and 600 x 800 pixel or better monitor.
- Microsoft Windows 95 or above.
- At least 8MB of RAM.
- At least 8MB free space in hard drive.
- Can access to a local or a network CD-ROM.
- A free serial port.
- A mouse or other pointing device supported by Windows.

RS232C Serial Port

A. Connecting between the Meter and computer (see figure 14)

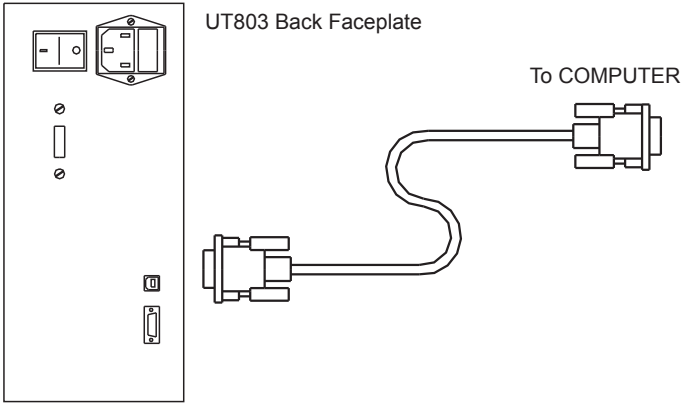

(Figure 14)

B. RS232C Port Cable

The Meter		Computer	
D-sub 9 Pin Male		D-sub 9 Pin Female	D-sub 25 Pin Female
1 (DCD)	——	1 (DCD)	8 (DCD)
2 (RXD)	——	3 (TXD)	2 (TXD)
3 (TXD)	——	2 (RXD)	3 (RXD)
4 (DTR)	——	4 (DTR)	20 (DTR)
5 (SG)	——	5 (SG)	7 (SG)
6 (DSR)	——	6 (DSR)	6 (DSR)
7 (RTS)	——	7 (RTS)	4 (RTS)
8 (CTS)	——	8 (CTS)	5 (CTS)
9 (RI)	——	9 (RI)	22 (RI)

C. Setting of RS232C Serial Ports

Default of RS232C serial port for communication is set as:

Baud Rate	19200
Start bit	1
Stop bit	1
Data bits	7
Parity Odd	

USB Serial Port

A. Connecting between the Meter and computer (see figure 15)

B. Setting of USB Serial Ports

Install the USB serial port driver according to the **Installation Guide & Computer Interface Software** before connecting the Meter and computer.

Check for the USB Serial port shown at the Control Panel => System => Device Manager. Make sure connect the Meter and the computer with the same port.

Please refer to the included **"Installation Guide & Computer Interface Software"** for installing and operating instructions of the **UT803 Interface Program..**

The Meter is to be supplied from an identical USB port complying with the requirement of Limit Power Source.

END

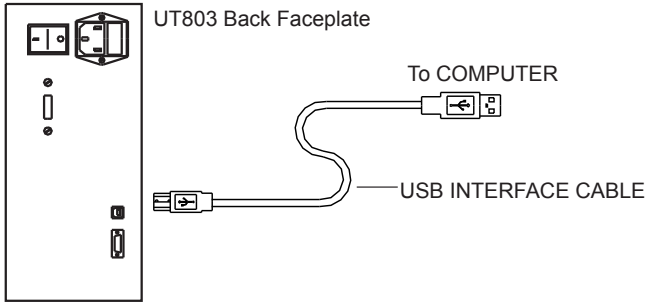

(Figure 15)

UNI-TREND TECHNOLOGY（CHINA）CO., LTD.
No6, Gong Ye Bei 1st Road,
Songshan Lake National High-Tech Industrial
Development Zone, Dongguan City,
Guangdong Province, China
Tel: (86-769) 8572 3888
http://www.uni-trend.com