Before using this product, please carefully read the instructions to understand the bracket size in order to adapt to your Solar panel installation. Simultaneously able to safely and correctly use this bracket product in different installation environments

## List :

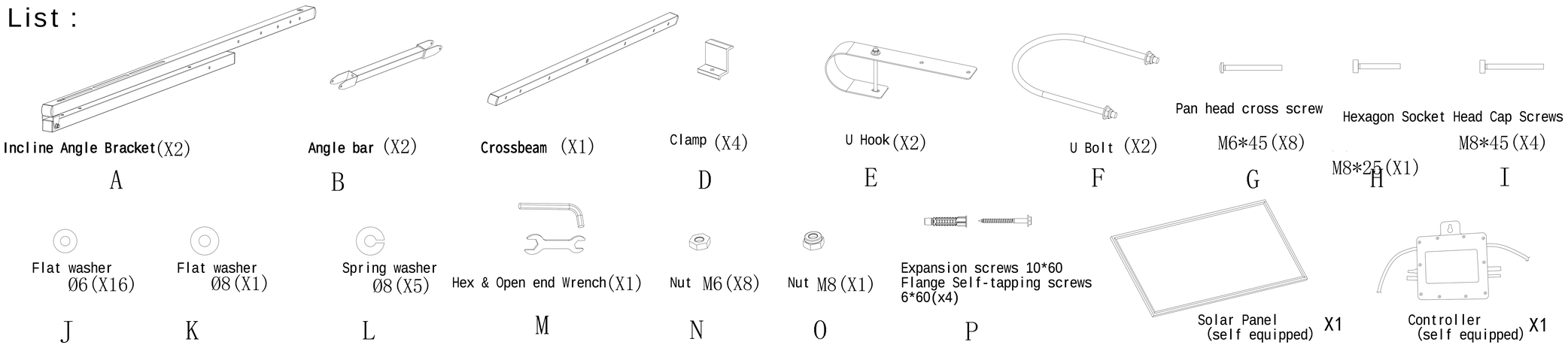


## Specifications :

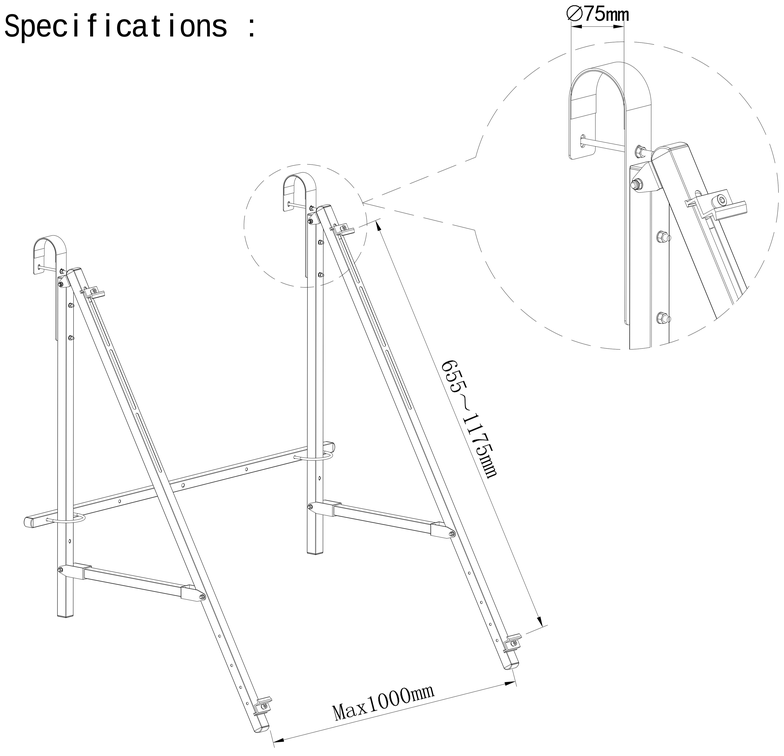


## Assembling :

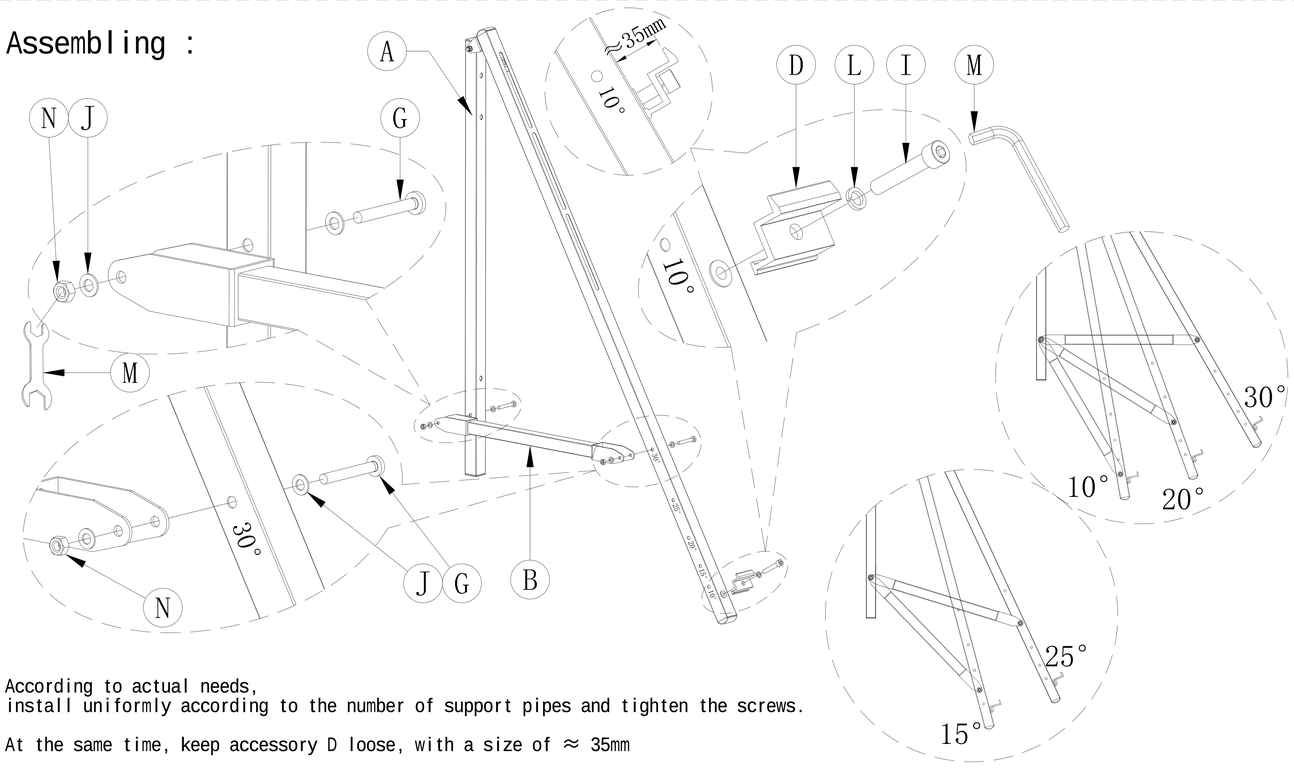


According to actual needs,
install uniformly according to the number of support pipes and tighten the screws.

At the same time, keep accessory D loose, with a size of ≈ 35mm

## Balcony Mount

NO. 1

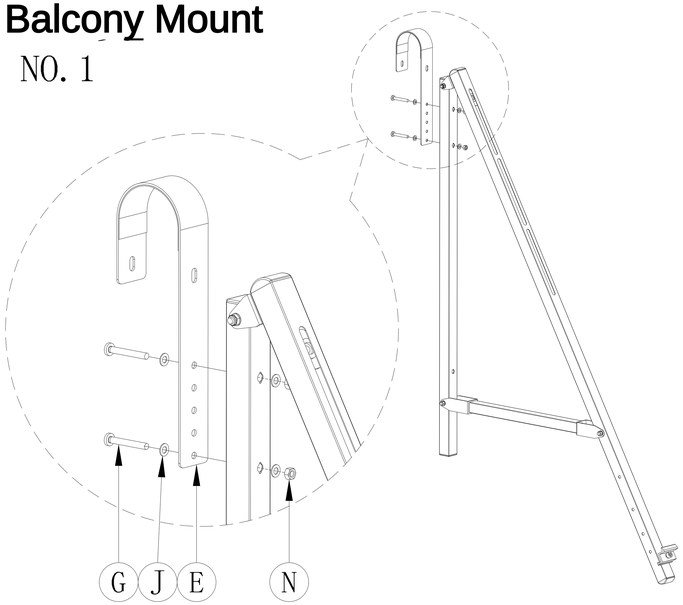


Before installing the hook,
remove the hook screws and then install the hook to the bracket

NO. 2

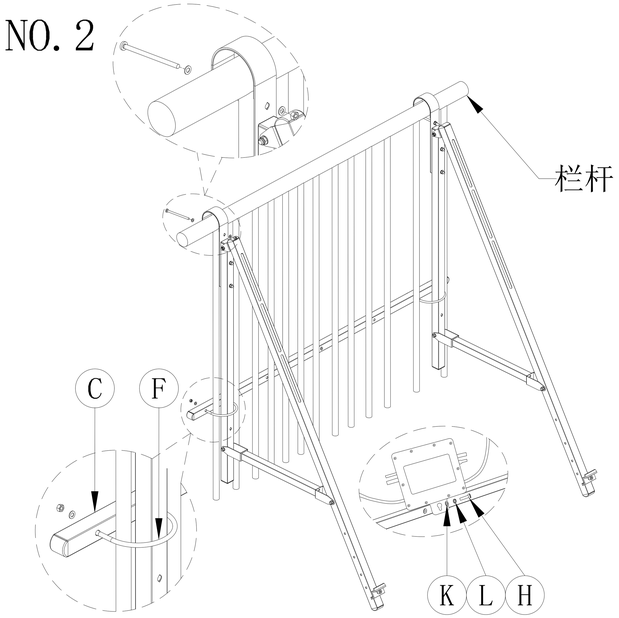


Install the hook screws and crossbars and secure them.
Simultaneously installing inverters

NO. 3

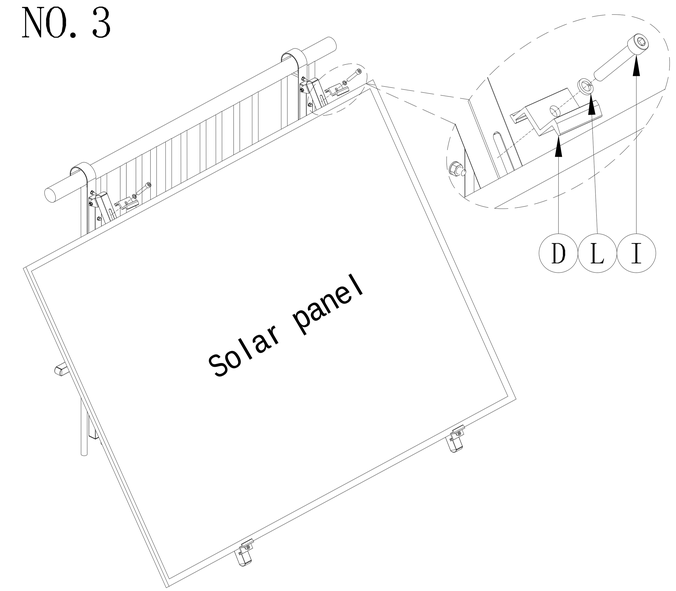


Lock the upper and lower pressure blocks and screws,when installing Solar panels

## Wall Mount

NO. 1

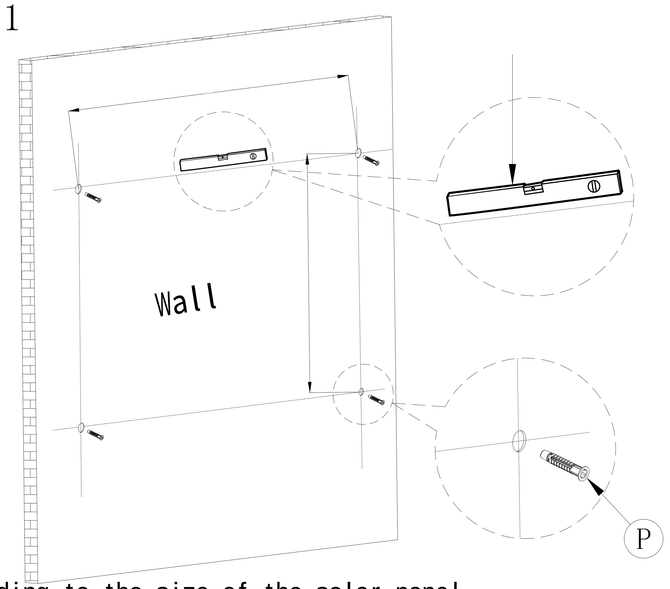


According to the size of the solar panel,
use a level ruler to make 4 holes with
a diameter of 10mm and a depth of 70mm on the wall

NO. 2

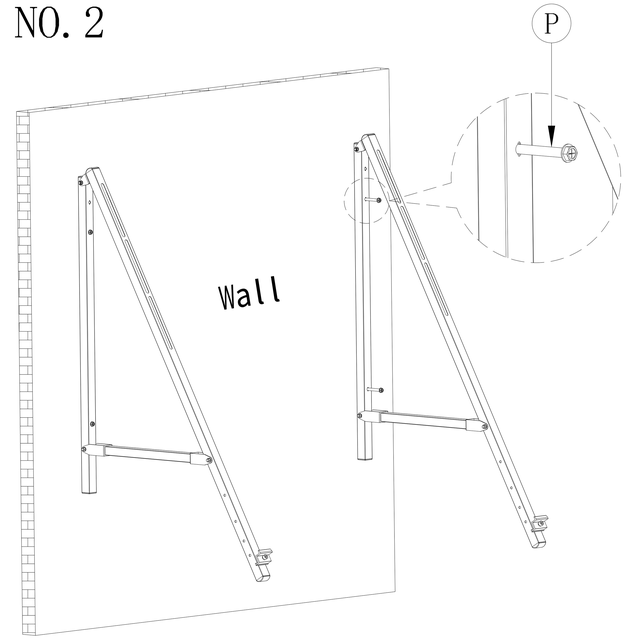


Drill holes on the wall and then drill in expansion bolts to fix the whole mount on the wall

NO. 3

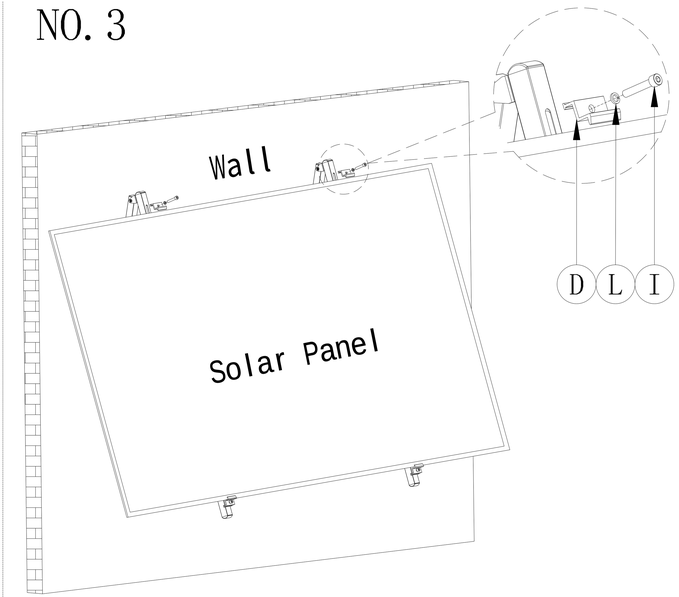


Install the bottom clamps to the structure for holding the module